45. Mixers and flowmakers

AMD

AMD.05-08.x.x - AMD.18.x.x - AMD.28.x.x

AMD.07.x.x

Mounting belt

Pos.	Description/Kit No	96692919
5	Mounting belt	2
6	Mounting device	1
7	Lock nut	2
8	Spring lock washer	2
9	Lock nut	2
11	Screw	2
12	Screw	2
28	Rubber band	1
10	Spring lock washer	2

Propeller

Pos.	Description/Kit No	96113478
1	Propeller nut	1
2	Spring washer	1
3	Lock washer	1
4	Propeller	1

Shaft seal

Pos.	Description/Kit No	96113477
13	Screws	2
14	O-ring	2
15	Seal cover	1
16	O-ring	2
105	Shaft seal	1
-	Oil	1

AMD.05-08.x.x model A

Cable

Pos.	Description/Kit No	96548100
181	Cable	1

Mounting belt

Pos.	Description/Kit No	96692919
5	Mounting belt	2
6	Mounting device	1
7	Lock nut	2
8	Spring lock washer	2
9	Lock nut	2
11	Screw	2
12	Screw	2
28	Rubber band	1
10	Spring lock washer	2

Propeller

Pos.	Description/Kit No	AMD.07	AMD.05 AMD.08
		99055190	99055184
1	Propeller nut	1	1
2	Spring washer	1	1
3	Lock washer	1	1
4	Propeller	1	1

Service kit

Pos.	Description/Kit No	99055170
-	Oil Shell Ondina X420	1
13	Screw	2
14	O-ring	2
16	O-ring	2
3	Lock washer	1
2	Disc spring	1
15	Sealing parts, cap	1
105	Shaft seal complete	1

AMD.18.x.x - AMD.28.x.x

Bearing, motor

Pos.	Description/Kit No	95065458
34	Ball bearing 6206 2RS	1
47	Ball bearing 6207 2RS	1

Cable entry, 1.5 mm^2

Pos.	Description/Kit No		95065457
15	O-ring	113.97 x 2.62	1
22	Cable entry (rubber) small		1
23	O-ring	37.82 x 1.78	1
24	Thrust washer		1
25	Cable entry (rubber) large		1
26	Cable guide		1
59	Press connection (cable)		6
60	Press connection (signal)		4
	Shrink tube for connections		10
61	Cable relief		1
63	Cable shoe		1

Gasket kit, motor

Pos.	Description/Kit No		95065455
12	O-ring	158.42 x 2.62	2
15	O-ring	113.97 x 2.62	1
22	Cable entry (rubber) small		1
23	O-ring	37.82 x 1.78	1
25	Cable entry (rubber) large		1
32	O-ring	63.22 x 1.78	1
45	O-ring	21.95 x 1.78	1
46	Lip seal	62 x 32 x 8	1
48	Lip seal	72 x 40 x 7	1
	O-ring	85.0 x 2.5	1

Shaft seal

Pos.	Description/Kit No	95035813
8	Shaft seal	1

AMD.07.x.x

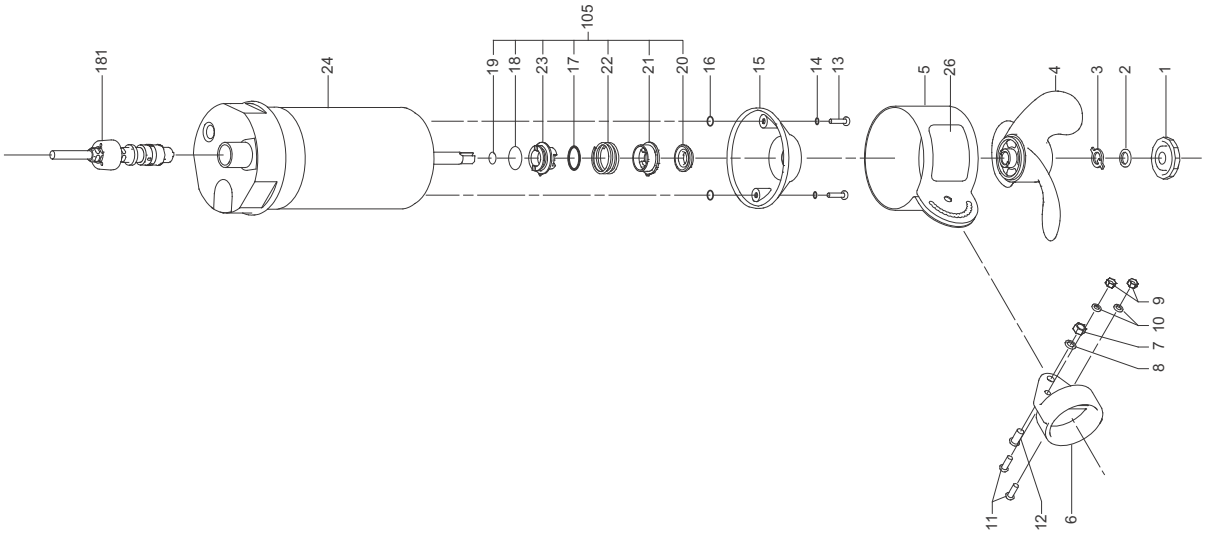

TM02 8013 3016

AMD.05-08.x.x model A

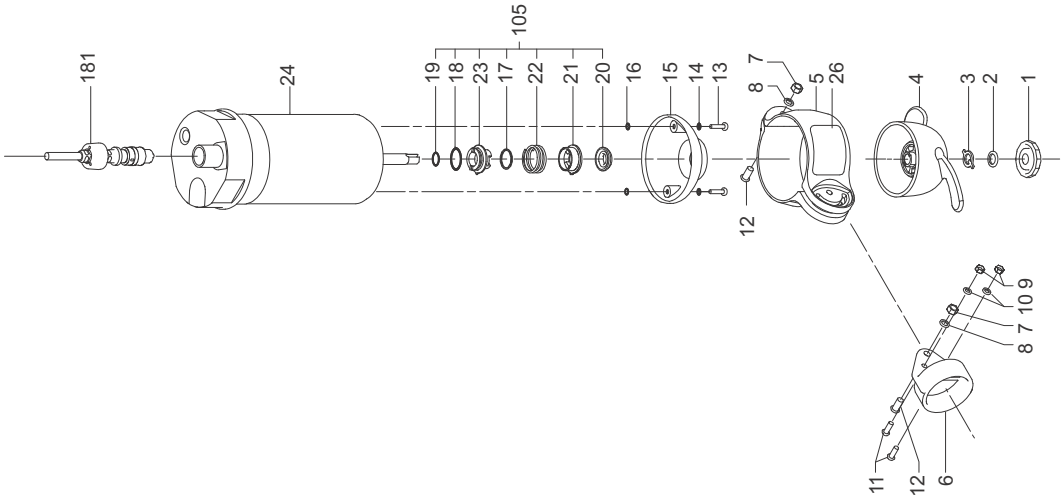

TM06 6353 3016

AMD.18.x.x - AMD.28.x.x

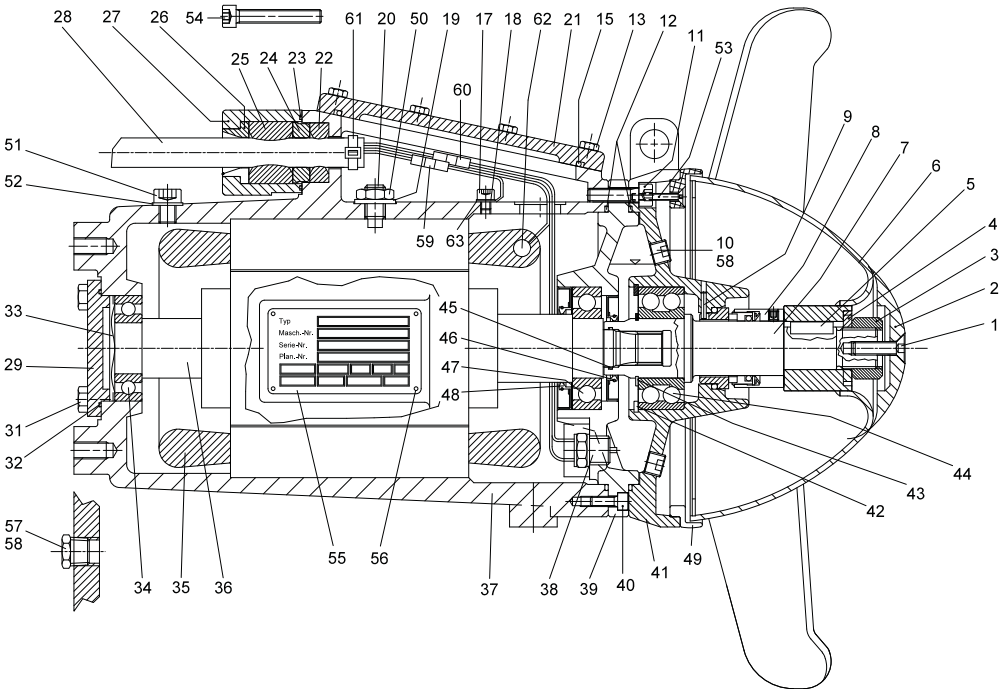

TM03 5485 3706

AMD.15-45 (50/60 Hz) and AMD.34-55 (60 Hz North America)

Cable entry, 1.5 mm^2

Pos.	Description/Kit No		95065449
1002	Cable flange		1
1003	Cable guide		1
1004	cable seal large		1
1005	Thrust washer		1
1006	cable seal small		1
1007	O-ring	37.8 x 1.78	1
1008	Hexagon socket head cap screw		4
1010	Hexagon socket head cap screw		2
1011	Lock washer		2
1014	Lock washer		4
1015	Cable clamp		1
1028	Hexagon socket head cap screw		1
1029	Lock washer		1
1030	Cable shoe		1
1125	O-ring	158.0 x 4.0	1
1177	Cable joint		10
1178	Shrink tube for connections		10

Cable entry, 1.5 mm^2, Ex version

(and for guide flange 100/100)

Pos.	Description/Kit No		95065450
1002	Cable flange		1
1003	Cable guide		1
1004	cable seal large		1
1005	Thrust washer		1
1006	cable seal small		1
1008	Hexagon socket head cap screw		3
1010	Countersunk screw		2
1011	Lock washer		2
1012	Lock nut		2
1014	Lock washer		3
1015	Cable clamp		1
1028	Hexagon socket head cap screw		1
1029	Lock washer		1
1030	Cable shoe		1
1125	O-ring	158.0 x 4.0	1
1172	Distance plate		1
1177	Cable joint		10
1178	Shrink tube for connections		10
1179	Cable joint		11
1180	Shrink tube for connections		11

Gasket kit, standard and Ex version (50 Hz only)

Pos.	Description/Kit No		95065448
1007	O-ring	37.8 x 1.78	1
1022	O-ring	192.0 x 4.0	1
1056	Seal washer	74.0 x 3.0	1
1071	O-ring		1
1109	Hub cover ELS		1
1111	Countersunk screw		1
1125	O-ring	158.0 x 4.0	1
1142	O-ring	138.0 x 3.0	1
1143	O-ring	192.0 x 4.0	1

Shaft seal, outer, standard and Ex version (50 Hz only)

Model 1 and 2, new sealing system

Pos.	Description/Kit No	95037572
1098	Mechanical shaft seal	1
1146	Protection ring ELS	1
1168	O-ring	1
1169	Lip seal	1
1170	V-ring	1
1171	INA ring	1

Shaft seal, outer (50 Hz only)

Model 0, old sealing system

Pos.	Description/Kit No	95065454
1098	Mechanical shaft seal	1
1146	Protection ring	1
1148	Protection sleeve	1
1149	Hexagon socket head cap screw	3
1150	Lock washer	3

Shaft seal, inner

Pos.	Description/Kit No		95065452
1048	Mechanical shaft seal (motor)		1
1050	Shim		1
1051	Retaining ring		1
1142	O-ring	138.0 x 3.0	1
1143	O-ring	192.0 x 4.0	1

AMD.xx.45.xx non-ATEX

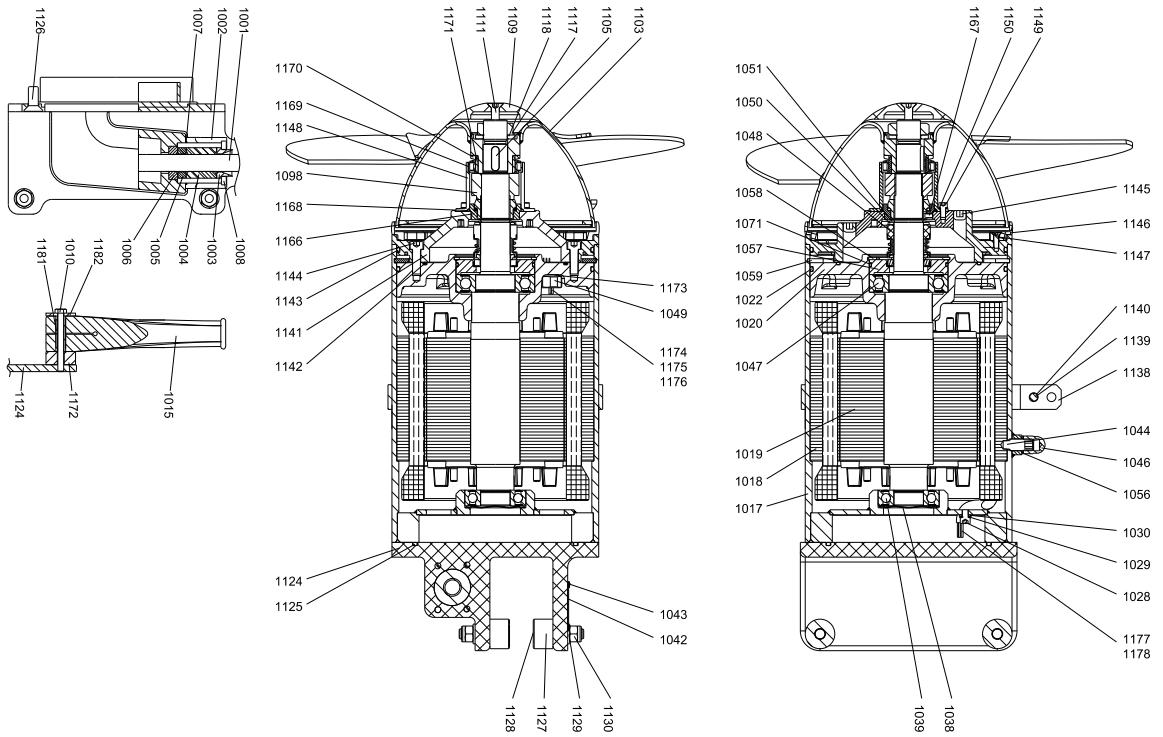

AMD.xx.45.xxx.Ex

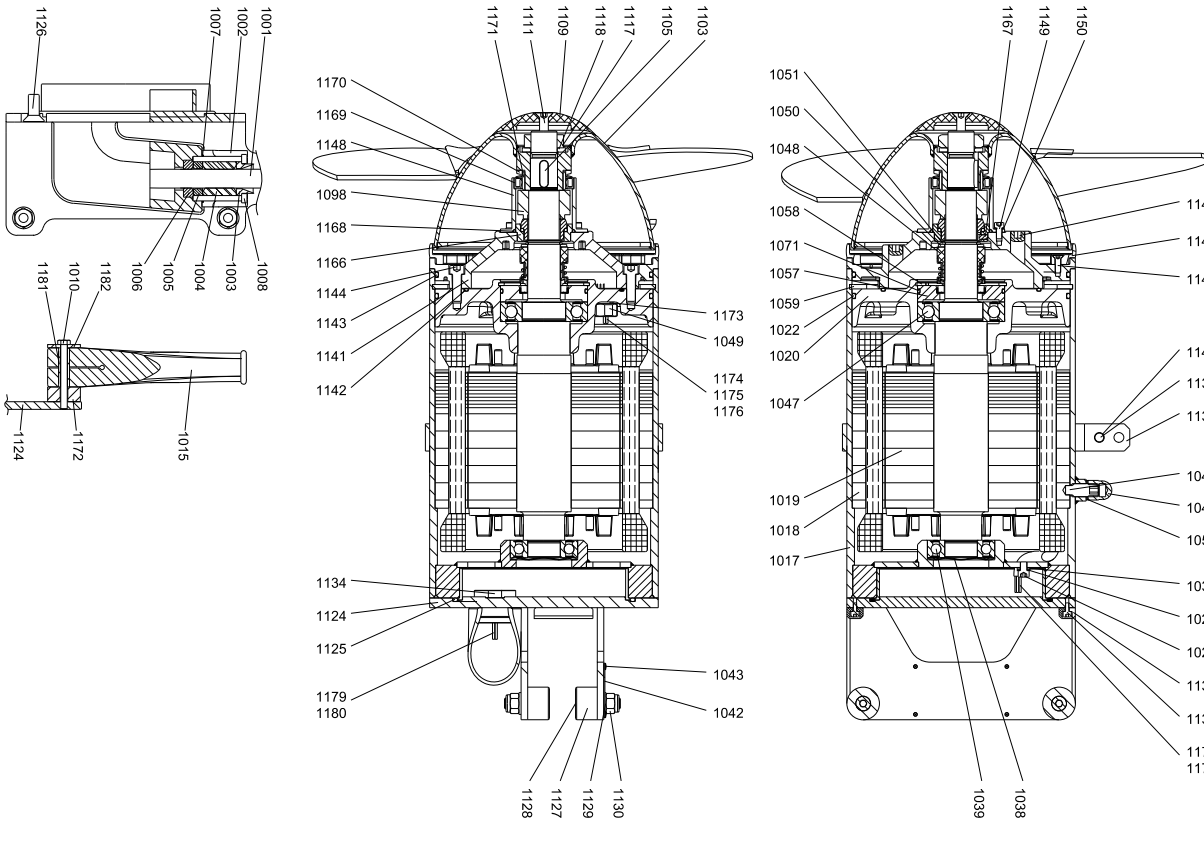

Bearing

Pos.	Description/Kit No		95065451
1038	Compensation disc		1
1039	Ball bearing 6206 2RS		1
1047	Ball bearing 6207 2RS		1

Cable, 10 m (12 x 1.5 mm^2 ∅17.3)

Pos.	Description/Kit No		95038410
1001	Cable	12x1.5 mm^2 ∅17.3	10 m/30 ft
1030	Cable shoe	1.5 mm^2/M6	1
1177	Cable joint	1.5 mm^2	10

Cable ,15 m (12 x 1.5 mm^2 ∅17.3)

Pos.	Description/Kit No		95038411
1001	Cable	12x1.5 mm^2 ∅17.3	15 m/50 ft
1030	Cable shoe	1.5 mm^2/M6	1
1177	Cable joint	1.5 mm^2	10

Cable, 25 m (12 x 1.5 mm^2 ∅17.3)

Pos.	Description/Kit No		95038412
1001	Cable	12x1.5 mm^2∅17.3	25 m/80 ft
1030	Cable shoe	1.5 mm^2/M6	1
1177	Cable joint	1.5 mm^2	10

Guide flange kit 60/60 SS cast

Pos.	Description/Kit No		95039395
1002	Cable flange AMD		1
1007	O-ring	37.82x1.78	1
1008	Cylinder head screw	M5 x 45	4
1010	Hexagon head screw	M6 x 55	2
1015	Bend protection D17		1
1124	Guide flange 60/60 SS cast		1
1125	O-ring	158.0 x 4.0	1
1126	Countersunk screw	M10 x 25	8
1127	Guide roller	∅30 x 20	4
1128	Countersunk screw	M10 x 40	4
1129	Washer	∅10.5/20 x 2	4
1130	Lock nut	M10	4
1133	Cylinder head screw	M5 x 10	4
1134	Grommet *	∅33.3 x 11.5	1
1137	Guide plate 60/60 AMD	54 x 10 x 40	2
1172	Distance plate AMD	45 x 30 x 13.5	1
1181	Distance bush f. bend protection	∅10/6.4 x 30	2
1182	Distance plate f. bend protection	50 x 30 x 3	1

* For non-ATEX version only

Guide flange 100/100, AISI 316

Pos.	Description/Kit No		95038626
1124	Guide flange		1
1125	O-ring	158.0 x 4.0	1
1126	Countersunk screw	M10 x 25	8
1127	Guide roller	∅30 x 20	4
1128	Countersunk screw	M10 x 40	4
1129	Washer	∅10.5/20x2	4
1130	Lock nut	M10	4
1133	Hexagon socket head cap screw	M5 x 8	4
1137	Guide plate 100/100	15x10x94	2

Guide flange 100/100, AISI 316, Ex version

Pos.	Description/Kit No		95038627
1124	Guide flange		1
1125	O-ring		1
1126	Countersunk screw		8
1127	Guide roller		4
1128	Countersunk screw		4
1129	Washer		4
1130	Lock nut		4
1133	Hexagon socket head cap screw		4
1137	Guide plate		2

Mounting kit, AMD

Pos.	Description/Kit No		95038630
1138	Lifting bracket		1
1139	Hexagon socket head cap screw		1
1140	Lock nut		1

Sealing flange kit, AMD, SS cast

Pos.	Description/Kit No		95038760
1141	Sealing flange AMD SS cast		1
1142	O-ring	138.0 x 3.0	1
1143	O-ring	192.0 x 4.0	1
1145	Plug	1/4" Gas	2

Water-in-oil sensor

Pos.	Description/Kit No		95038409
1049	Water-in-oil sensor		1
1173	Seal washer		1

AMD.xx.45.xxx non-ATEX

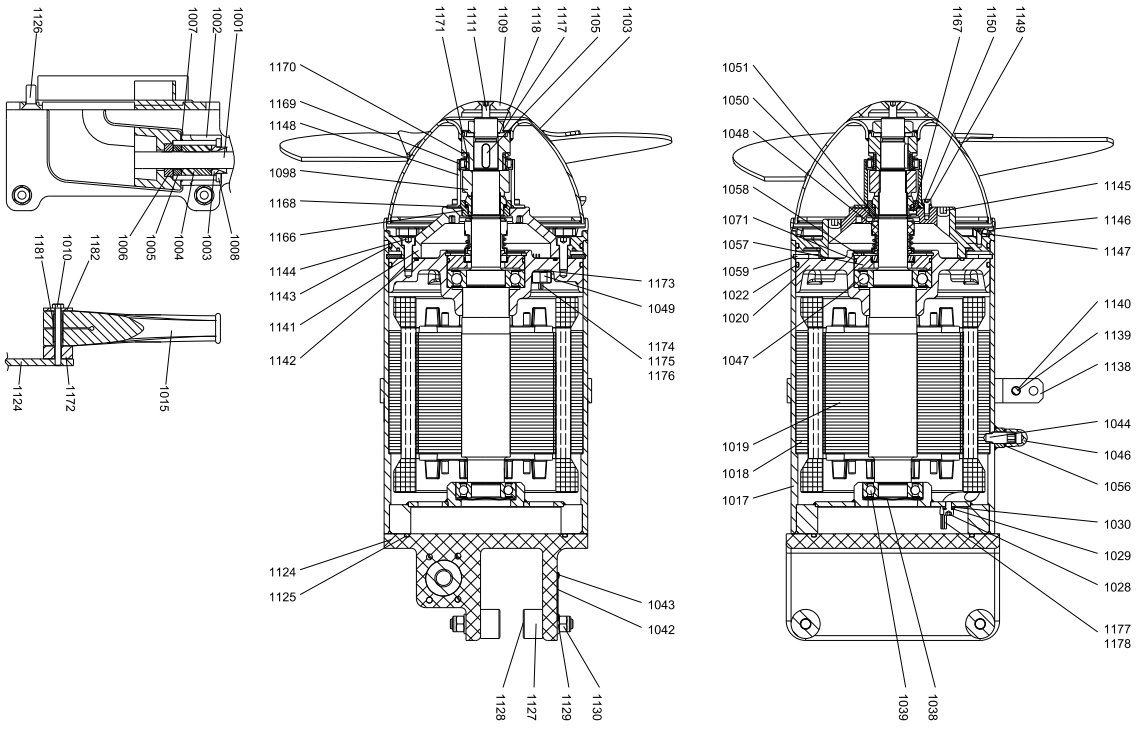

AMD.xx.45.xxx.Ex

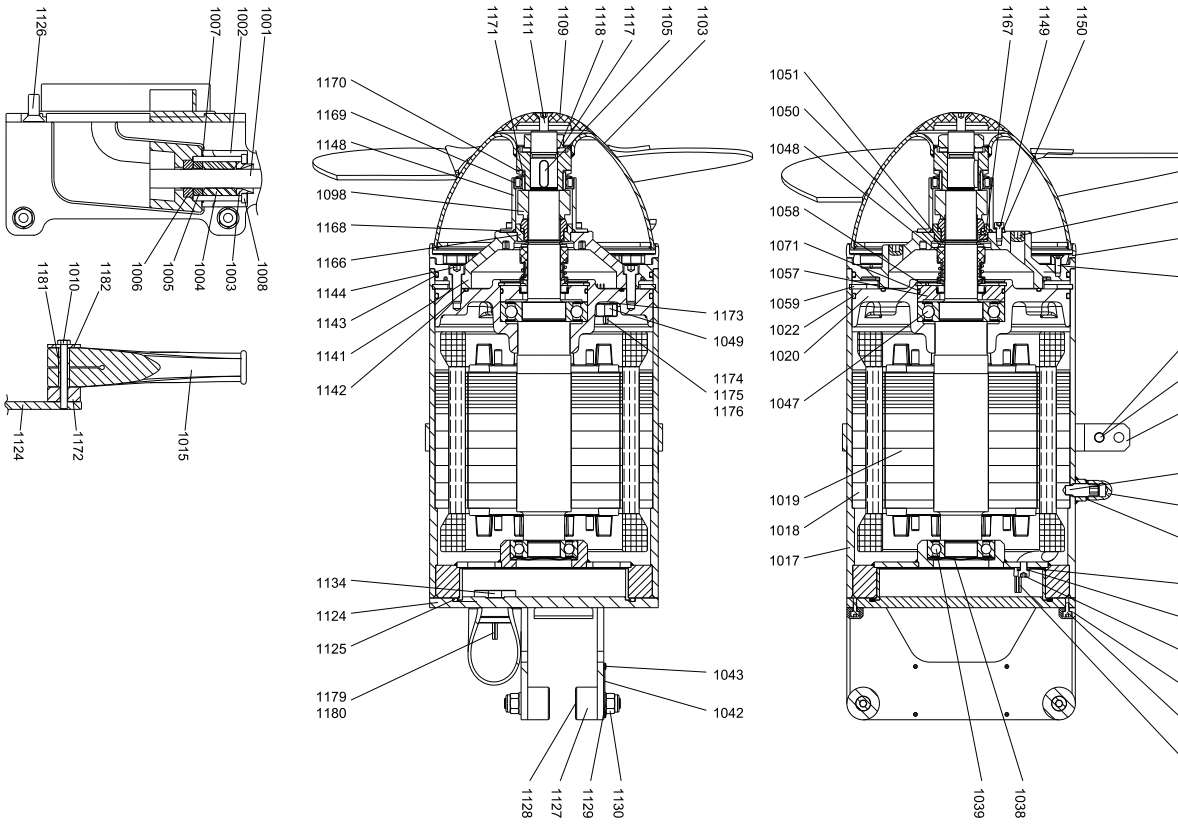

Gasket kit, with propeller 10 °

Note: Upgrade kit, old to new sealing system
AMD.15-20 50 Hz (standard and Ex)

AMD.25-30 60 Hz (standard)

AMD.34-40 60 Hz US (standard)

Pos.	Description/Kit No	95037482
1098	Mechanical shaft seal	1
1103	Propeller	1
1141	Sealing flange AMD SS cast	1
1142	O-ring	1
1143	O-ring	1
1146	Protection ring ELS	1
1148	Protection sleeve	1
1149	Hexagon socket head cap screw	3
1150	Lock washer	3
1168	O-ring	1
1169	Lip seal	1
1170	V-ring	1

Gasket kit, with propeller 12 °

Note: Upgrade kit, old to new sealing system
AMD.25-30 50 Hz (standard and Ex)

AMD.35-40 60 Hz (standard)

AMD.47-55 60 Hz US (standard)

Pos.	Description/Kit No	95037483
1098	Mechanical shaft seal	1
1103	Propeller	1
1141	Sealing flange AMD SS cast	1
1142	O-ring	1
1143	O-ring	1
1146	Protection ring ELS	1
1148	Protection sleeve	1
1149	Hexagon socket head cap screw	3
1150	Lock washer	3
1168	O-ring	1
1169	Lip seal	1
1170	V-ring	1

Gasket kit, with propeller 14 °

Note: Upgrade kit, old to new sealing system.
AMD.35-40 50 Hz (standard and Ex)

Pos.	Description/Kit No	95037484
1098	Mechanical shaft seal	1
1103	Propeller	1
1141	Sealing flange AMD SS cast	1
1142	O-ring	1
1143	O-ring	1
1146	Protection ring ELS	1
1148	Protection sleeve	1
1149	Hexagon socket head cap screw	3
1150	Lock washer	3
1168	O-ring	1
1169	Lip seal	1
1170	V-ring	1

Gasket kit, with propeller 16 °

Note: Upgrade kit, old to new sealing system.
AMD.45 50 Hz (standard and Ex)

Pos.	Description/Kit No	95037485
1098	Mechanical shaft seal	1
1103	Propeller	1
1141	Sealing flange AMD SS cast	1
1142	O-ring	1
1143	O-ring	1
1146	Protection ring ELS	1
1148	Protection sleeve	1
1149	Hexagon socket head cap screw	3
1150	Lock washer	3
1168	O-ring	1
1169	Lip seal	1
1170	V-ring	1

Propeller, 10 ° AISI 316

AMD.15-20 50 Hz (standard and Ex)

AMD.25-30 60 Hz (standard)

AMD.34-40 60 Hz US (standard)

Pos.	Description/Kit No	95038616
1103	Propeller	1
1105	Parallel key	1
1109	Hub cover ELS	1
1111	Countersunk screw	1
1117	Nut	1
1118	Lock washer	1
1171	INA ring	1

Propeller, 12 ° AISI 316

AMD.25-30 50 Hz (standard and Ex)

AMD.25-30 60 Hz (standard)

AMD.35-40 60 Hz US (standard)

Pos.	Description/Kit No	95038617
1103	Propeller	1
1105	Parallel key	1
1109	Hub cover ELS	1
1111	Countersunk screw	1
1117	Nut	1
1118	Lock washer	1
1171	INA ring	1

Propeller, 14 ° AISI 316

AMD.35-40 50 Hz

Pos.	Description/Kit No	95038618
1103	Propeller	1
1105	Parallel key	1
1109	Hub cover ELS	1
1111	Countersunk screw	1
1117	Nut	1
1118	Lock washer	1
1171	INA ring	1

Propeller, 16 ° AISI 316

AMD.45 50 Hz

Pos.	Description/Kit No	95038619
1103	Propeller	1
1105	Parallel key	1
1109	Hub cover ELS	1
1111	Countersunk screw	1
1117	Nut	1
1118	Lock washer	1
1171	INA ring	1

AMD.xx.45.xxx non-ATEX

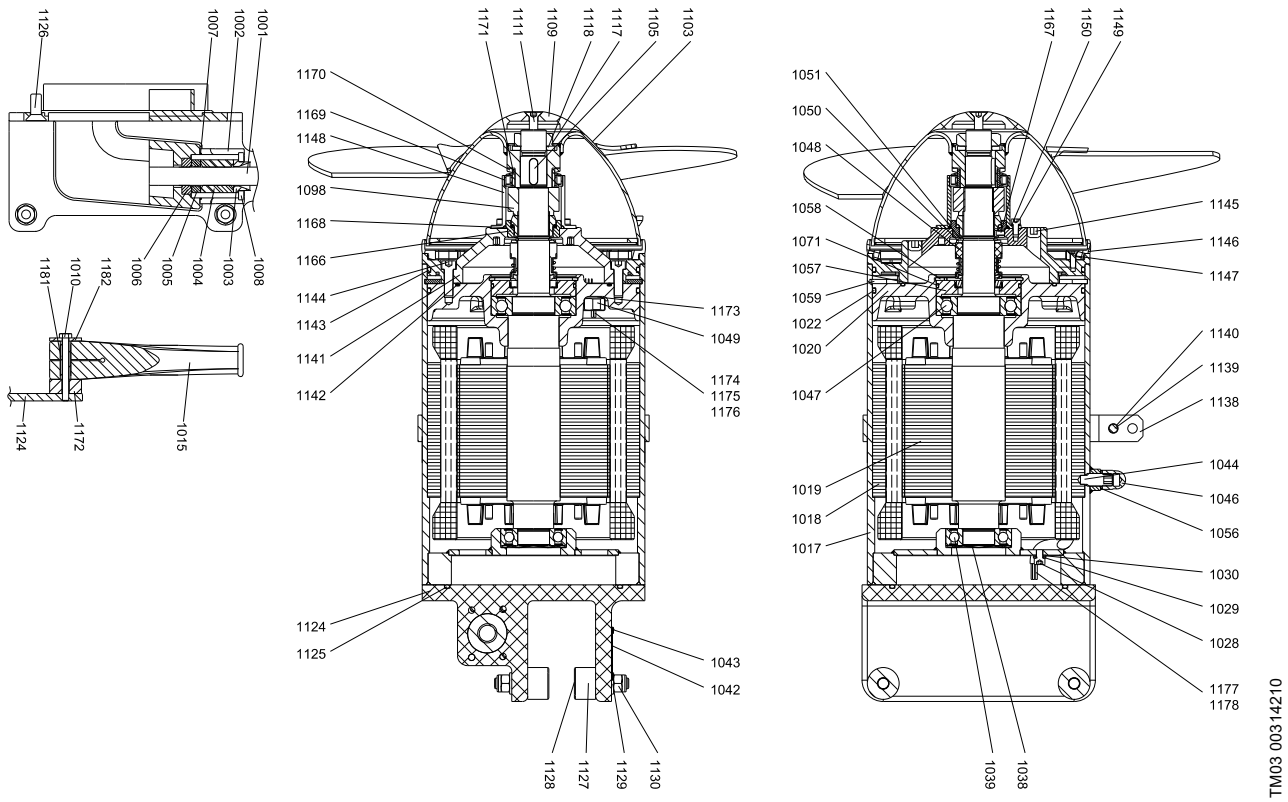

AMD.xx.45.xxx.Ex

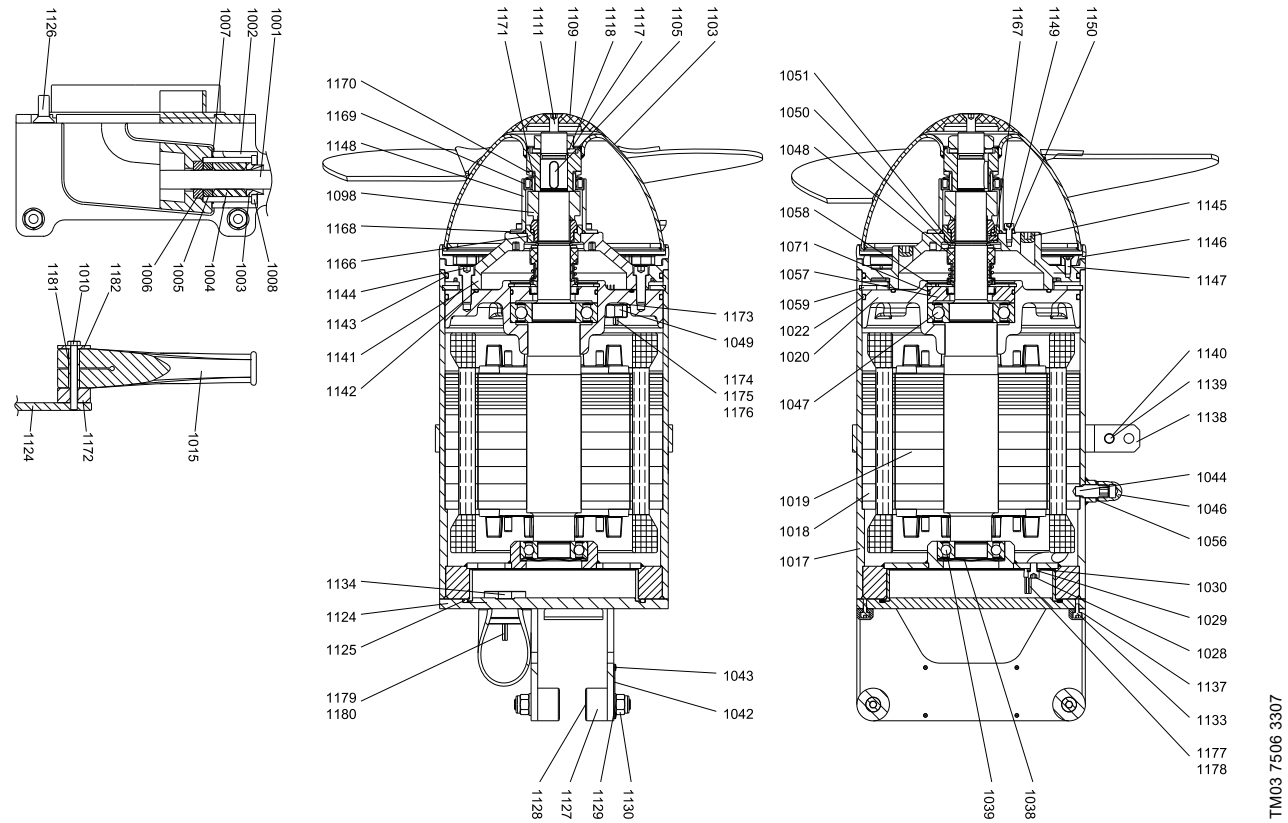

Motor, 8-pole 2.5 kW / 3.4 Hp

AMD.15-25 50 Hz, AMD.25 60 Hz, AMD.34 60 Hz US

Pos.	Description/Kit No	95038620
1017	Motor housing	1
1018	Stator	1
1019	Rotor with shaft	1
1020	Motor flange	1
1022	O-ring	1
1038	Compensation disc	1
1039	Ball bearing	1
1044	Set screw	1
1046	Nut	1
1047	Ball bearing	1
1049	Water-in-oil sensor	1
1056	Seal washer	1
1057	Intermediate ring	1
1058	Retaining ring	1
1059	Retaining ring	1
1071	O-ring	1
1173	Seal washer	1
1174	Cable joint	2
1175	Cable joint	2
1176	Shrink tube for connections	2

Motor, 8-pole 4.5 kW / 6.0 Hp

AMD.30-45 50 Hz, AMD.30-40 60 Hz, AMD.40-55 60 Hz US

Pos.	Description/Kit No	95038621
1017	Motor housing	1
1018	Stator	1
1019	Rotor with shaft	1
1020	Motor flange	1
1022	O-ring	1
1038	Compensation disc	1
1039	Ball bearing	1
1044	Set screw	1
1046	Nut	1
1047	Ball bearing	1
1049	Water-in-oil sensor	1
1056	Seal washer	1
1057	Intermediate ring	1
1058	Retaining ring	1
1059	Retaining ring	1
1071	O-ring	1
1173	Seal washer	1
1174	Cable joint	2
1175	Cable joint	2
1176	Shrink tube for connections	2

Motor, 8-pole 2.5 kW, Ex version

AMD.15-25 50 Hz (50 Hz Only)

Pos.	Description/Kit No	95038622
1017	Motor housing	1
1018	Stator	1
1019	Rotor with shaft	1
1020	Motor flange	1
1022	O-ring	1
1038	Compensation disc	1
1039	Ball bearing	1
1044	Set screw	1
1046	Nut	1
1047	Ball bearing	1
1049	Water-in-oil sensor	1
1056	Seal washer	1
1057	Intermediate ring	1
1058	Retaining ring	1
1059	Retaining ring	1
1071	O-ring	1
1173	Seal washer	1
1174	Cable joint	2
1175	Cable joint	2
1176	Shrink tube for connections	2

Motor, 8-pole 4.5 kW, Ex version

AMD.30-45 50 Hz (50 Hz Only)

Pos.	Description/Kit No	95038623
1017	Motor housing	1
1018	Stator	1
1019	Rotor with shaft	1
1020	Motor flange	1
1022	O-ring	1
1038	Compensation disc	1
1039	Ball bearing	1
1044	Set screw	1
1046	Nut	1
1047	Ball bearing	1
1049	Water-in-oil sensor	1
1056	Seal washer	1
1057	Intermediate ring	1
1058	Retaining ring	1
1059	Retaining ring	1
1071	O-ring	1
1173	Seal washer	1
1174	Cable joint	2
1175	Cable joint	2
1176	Shrink tube for connections	2

AMD.xx.45.xxx non-ATEX

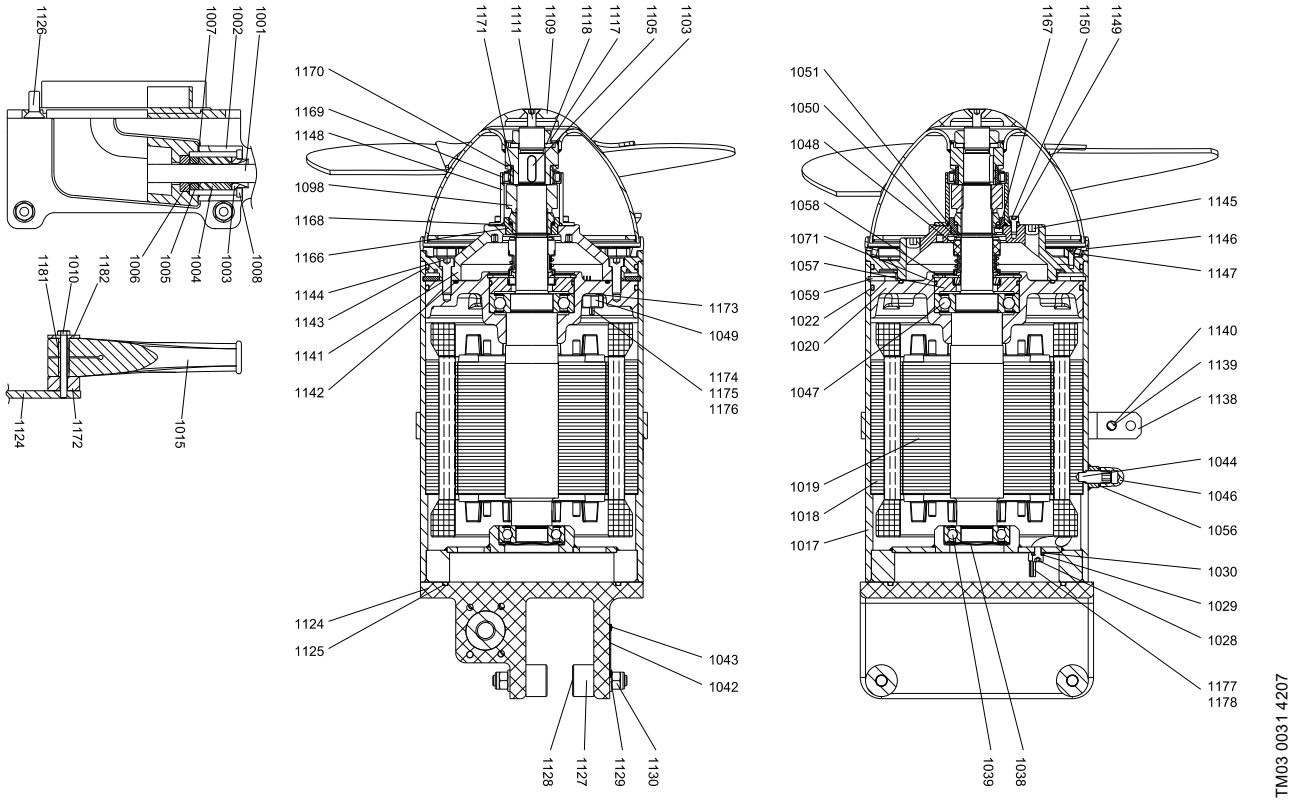

AMD.xx.45.xxx.Ex

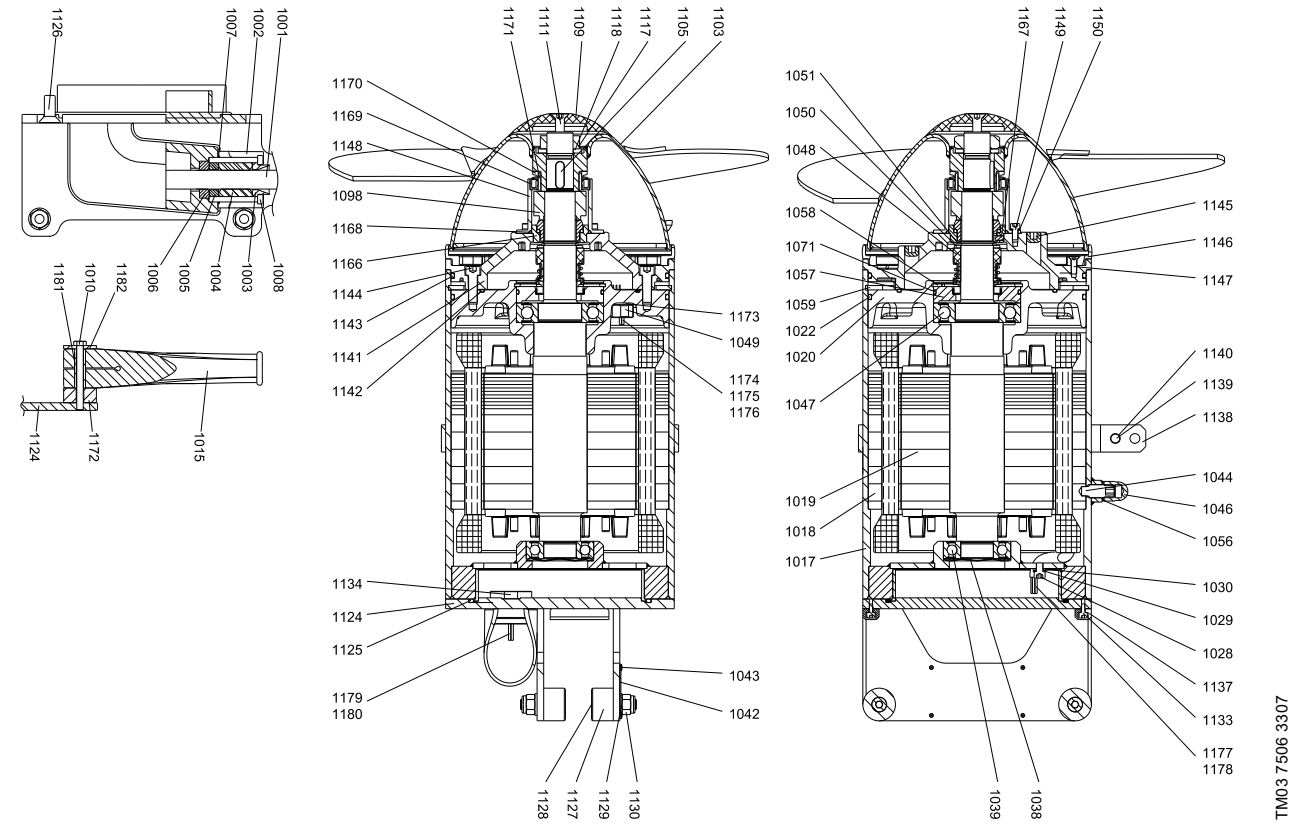

AMG

AMG.15-40 (50/60 Hz) and AMG.20-50 (60 Hz North America)

Bearing, motor

Pos.	Description/Kit No		95065458
1038	Compensation disc		1
1039	Ball bearing 6206 2RS		1
1047	Ball bearing 6207 2RS		1

Bearing, gearbox

Pos.	Description/Kit No		95065459
1090	Slotted nut		1
1091	Lock washer		1
1092	Tapered roller bearing 30207		1
1094	Tapered roller bearing 30207		1

Cable entry, 1.5 mm2

Pos.	Description/Kit No		95065457
1003	Cable guide		1
1004	cable seal, large		1
1005	Thrust washer		1
1006	cable seal, small		1
1007	O-ring	37.82 x 1.78	1
1008	Hexagon socket head cap screw		2
1009	Cable relief		1
1025	O-ring	113.97 x 2.62	1
1026	Cable joint		6
1027	Cable joint		4
1030	Cable shoe		1
-	Shrink tube for connections		10

Gear housing

Pos.	Description/Kit No		95038404
1088	Gear housing		1
1089	Retaining ring		1
1090	Slotted nut		1
1091	Lock washer		1
1092	Tapered roller bearing		1
1093	Gear shaft		1
1094	Tapered roller bearing		1
1101	Drain plug with magnet		1
1102	Plug		2
1119	PTFE tape		1

Radial seal

Pos.	Description/Kit No		95039130
1104	Lip seal	105 x 85 x 13	2
1108	O-ring	85.0 x 2.5	1
	O-ring	105.0 x 3.0	1
	O-ring	184.0 x 3.0	1
1110	Washer	∅8.4 / 16 x 1.0	1
1157	Gasket	96 x 75 x 2	1

Gasket kit

Pos.	Description/Kit No		95065455
1004	cable seal, large		1
1006	cable seal, small		1
1007	O-ring	37.82 x 1.78	1
1022	O-ring	158.42 x 2.62	2
1025	O-ring	113.97 x 2.62	1
1037	O-ring	63.22 x 1.78	1
1054	Lip seal	62 x 32 x 8	1
1055	Lip seal	72 x 40 x 7	1
1071	O-ring	21.95 x 1.78	1
1108	O-ring	85.0 x 2.5	1

Gasket kit, Ex version (50 Hz Only)

Pos.	Description/Kit No		95065456
1004	cable seal, large		1
1006	cable seal, small		1
1007	O-ring	37.82 x 1.78	1
1022	O-ring	158.42 x 2.62	2
1025	O-ring	113.97 x 2.62	1
1037	O-ring	63.22 x 1.78	1
1048	Mechanical shaft seal	45 x 32 x 0.5	1
1050	Shim		1
1051	Retaining ring		1
1108	O-ring	85.0 x 2.5	1

Shaft seal

Pos.	Description/Kit No		95065462
1095	Intermediate ring		1
1098	Mechanical shaft seal		1

Slotted nut

Pos.	Description/Kit No		95038413
1106	Slotted nut		2
1107	Lock washer		2

Wear ring

Pos.	Description/Kit No		Standard 95037374
1097	Wear ring ceramic		1
1104	Lip seal	105 x 85 x 13	2
1108	O-ring	85.0 x 2.5	1
	O-ring	105.0 x 3.0	1
	O-ring	184.0 x 3.0	1
1157	Gasket		1

Water-in-oil sensor

Pos.	Description/Kit No		95038409
1049	Water-in-oil sensor		1
1173	Seal washer		1

AMG non-ATEX

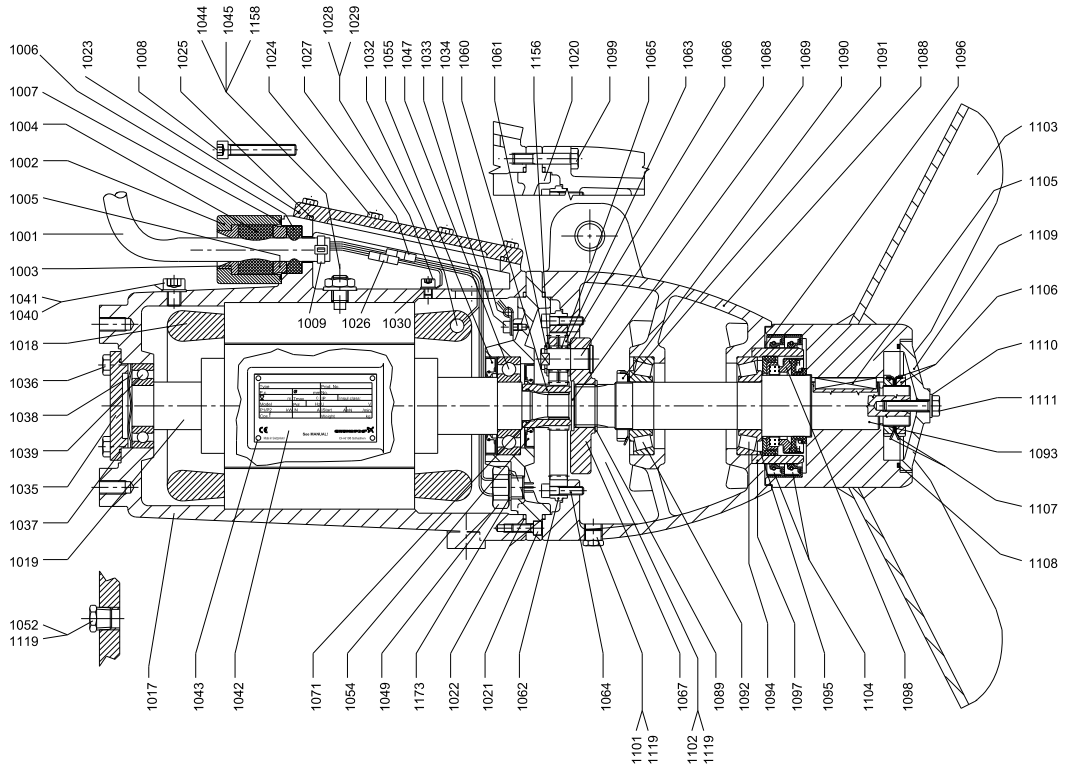

AMG.Ex (50 Hz only)

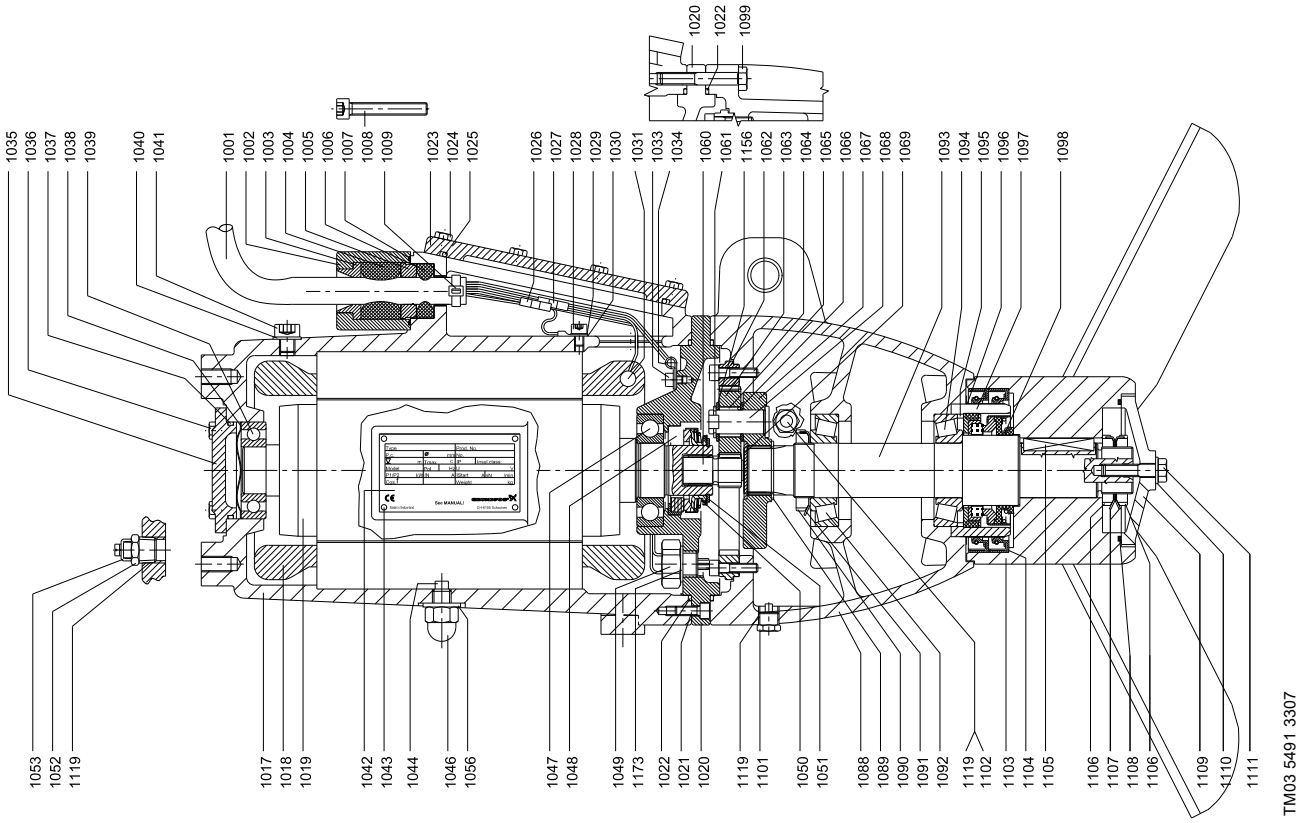

Propeller, AISI 304 - 50 Hz

Pos.	Description/Kit No	AMG.15.40*	AMG.22.45*	AMG.30.47*	AMG.40.52*	AMG.15.55	AMG.22.64	AMG.30.64	AMG.40.71
		95038400	95038401	95038402	95038403	95038461	95038462	95038463	95038464
1103	Propeller 1.5 kW	1	-	-	-	1	-	-	-
1103	Propeller 2.2 kW	-	1	-	-	-	1	-	-
1103	Propeller 3.0 kW	-	-	1	-	-	-	1	-
1103	Propeller 4.0 kW	-	-	-	1	-	-	-	1
1104	Lip seal	2	2	2	2	2	2	2	2
1105	Parallel key	1	1	1	1	1	1	1	1
1106	Slotted nut	2	2	2	2	2	2	2	2
1108	O-ring	1	1	1	1	1	1	1	1
1109	Hub cover	1	1	1	1	1	1	1	1
1110	Washer	1	1	1	1	1	1	1	1
1111	Hexagon head screw	1	1	1	1	1	1	1	1

* Old version. Can be updated to the new version with higher efficiency by ordering the kit for the corresponding new version.

Propeller, AISI 316 - 50 Hz

Pos.	Description/Kit No	AMG.15.40*	AMG.22.45*	AMG.30.47*	AMG.40.52*	AMG.15.55	AMG.22.64	AMG.30.64	AMG.40.71
		95038457	95038458	95038459	95038460	95038465	95038466	95038467	95038468
1103	Propeller 1.5 kW	1	-	-	-	1	-	-	-
1103	Propeller 2.2 kW	-	1	-	-	-	1	-	-
1103	Propeller 3.0 kW	-	-	1	-	-	-	1	-
1103	Propeller 4.0 kW	-	-	-	1	-	-	-	1
1104	Lip seal	2	2	2	2	2	2	2	2
1105	Parallel key	1	1	1	1	1	1	1	1
1106	Slotted nut	2	2	2	2	2	2	2	2
1108	O-ring	1	1	1	1	1	1	1	1
1109	Hub cover	1	1	1	1	1	1	1	1
1110	Washer	1	1	1	1	1	1	1	1
1111	Hexagon head screw	1	1	1	1	1	1	1	1

* Old version. Can be updated to the new version with higher efficiency by ordering the kit for the corresponding new version.

Propeller, AISI 304 - 60 Hz

Pos.	Description	60 Hz SI	AMG.15.37*	AMG.22.41*	AMG.30.43*	AMG.40.47*	AMG.15.40	AMG.22.52	AMG.30.63	AMG.40.64
		60 Hz US	AMG.20.15*	AMG.30.16*	AMG.40.17*	AMG.50.19*	AMG.20.16	AMG.30.20	AMG.40.24	AMG.50.25
		Kit No	95038716	95038717	95038718	95038719	95038724	95038725	95038726	95038727
1103	Propeller 1.5 kW / 2 Hp		1	-	-	-	1	-	-	-
1103	Propeller 2.2 kW / 3 Hp		-	1	-	-	-	1	-	-
1103	Propeller 3.0 kW / 4 Hp		-	-	1	-	-	-	1	-
1103	Propeller 4.0 kW / 5 Hp		-	-	-	1	-	-	-	1
1104	Lip seal		2	2	2	2	2	2	2	2
1105	Parallel key		1	1	1	1	1	1	1	1
1106	Slotted nut		2	2	2	2	2	2	2	2
1108	O-ring		1	1	1	1	1	1	1	1
1109	Hub cover		1	1	1	1	1	1	1	1
1110	Washer		1	1	1	1	1	1	1	1
1111	Hexagon head screw		1	1	1	1	1	1	1	1

* Old version. Can be updated to the new version with higher efficiency by ordering the kit for the corresponding new version.

Cable

Pos.	Description/Kit No	95038410	95038411	95038412
1001	Cable	10 m / 30 ft	15 m / 50 ft	25 m / 80 ft
1026	Cable joint	6	6	6
1027	Cable joint	4	4	4
1030	Cable shoe	1	1	1

Gear

Pos.	Description/Kit No	Non-Ex version	Ex version
		95065491	95065494
1060	Sun wheel	1	1
1061	Retaining ring	3	3
1062	Ring gear	1	1
1063	Planet gear	3	3
1065	Roller	81	81
1066	Washer	3	3
1067	Planet carrier	1	1
1068	Planet pin	3	3
1069	Cover	1	1
1071	O-ring	1	-
1156	Washer	3	3

AMG non-ATEX

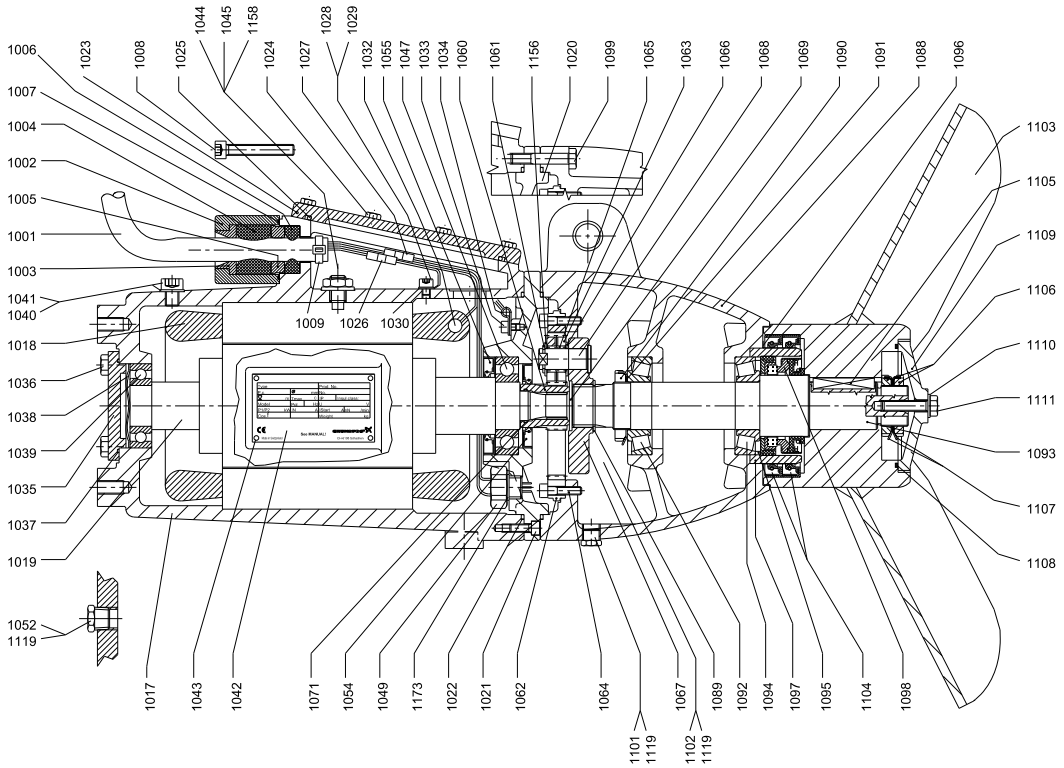

AMG.15.xxx.Ex - AMG.40.xxx.Ex

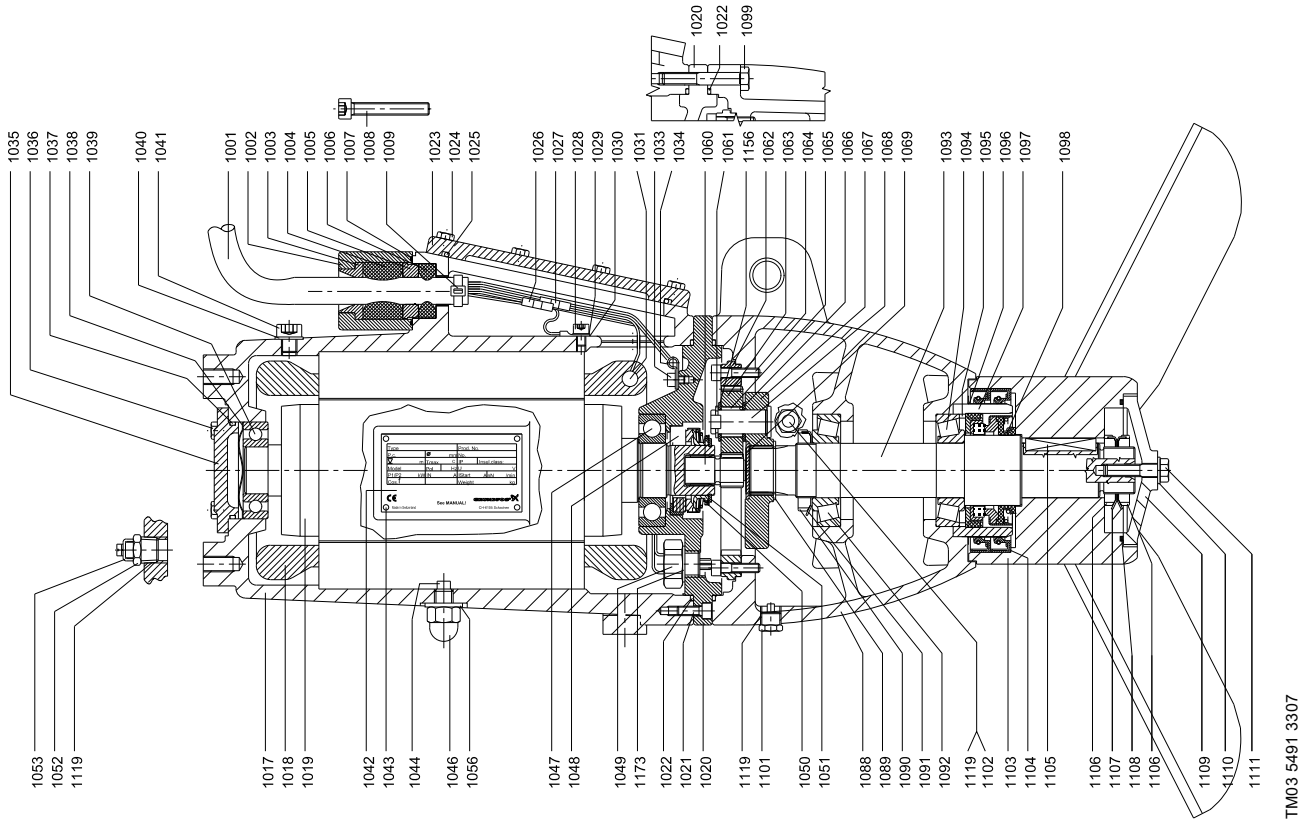

Propeller, AISI 316 - 60 Hz

Pos.	Description	60 Hz SI	AMG.15.37*	AMG.22.41*	AMG.30.43*	AMG.40.47*	AMG.15.40	AMG.22.52	AMG.30.63	AMG.40.64
		60 Hz US	AMG.20.15*	AMG.30.16*	AMG.40.17*	AMG.50.19*	AMG.20.16	AMG.30.20	AMG.40.24	AMG.50.25
		Kit No	95038720	95038721	95038722	95038723	95038728	95038729	95038730	95038731
1103	Propeller 1.5 kW / 2 Hp		1	-	-	-	1	-	-	-
1103	Propeller 2.2 kW / 3 Hp		-	1	-	-	-	1	-	-
1103	Propeller 3.0 kW / 4 Hp		-	-	1	-	-	-	1	-
1103	Propeller 4.0 kW / 5 Hp		-	-	-	1	-	-	-	1
1104	Lip seal		2	2	2	2	2	2	2	2
1105	Parallel key		1	1	1	1	1	1	1	1
1106	Slotted nut		2	2	2	2	2	2	2	2
1108	O-ring		1	1	1	1	1	1	1	1
1109	Hub cover		1	1	1	1	1	1	1	1
1110	Washer		1	1	1	1	1	1	1	1
1111	Hexagon head screw		1	1	1	1	1	1	1	1

* Old version. Can be updated to the new version with higher efficiency by ordering the kit for the corresponding new version.

Motor

Pos.	Description		Non-Ex version		Ex version	
		50 Hz	AMG.15.xx AMG.22.xx	AMG.30.xx AMG.40.xx	AMG.15.xx.Ex AMG.22.xx.Ex	AMG.30.xx.Ex AMG.40.xx.Ex
		60 Hz SI	AMG.15.xx AMG.22.xx	AMG.30.xx AMG.40.xx	-	-
		60 Hz US	AMG.20.xx AMG.30.xx	AMG.40.xx AMG.50.xx	-	-
		Kit No	95038405	95038406	95038407	95038408
1002	Cable flange		1	1	1	1
1007	O-ring		1	1	1	1
1008	Hexagon socket head cap screw		2	2	2	2
1017	Motor housing		1	1	1	1
1018	Stator		1	1	1	1
1019	Rotor with shaft		1	1	1	1
1020	Motor flange		1	1	1	1
1021	Hexagon socket head cap screw		3	3	3	3
1022	O-ring		2	2	2	2
1023	Terminal box cover		1	1	1	1
1024	Hexagon head screw		8	8	8	8
1025	O-ring		1	1	1	1
1028	Hexagon socket head cap screw		1	1	1	1
1029	Lock washer		1	1	1	1
1033	Hexagon socket head cap screw		1	1	1	1
1034	Cable clamp		1	1	1	1
1035	Bearing cover		1	1	1	1
1036	Hexagon head screw		4	4	4	4
1037	O-ring		1	1	1	1
1038	Compensation disc		1	1	1	1
1039	Ball bearing		1	1	-	-
	Ball bearing		-	-	1	1
1040	Washer		1	1	1	1
1041	Hexagon socket head cap screw		1	1	1	1
1044	Set screw		1	1	1	1
1045	Spring washer		1	1	-	1
1046	Nut		-	-	1	1
1047	Ball bearing		1	1	-	-
	Ball bearing		-	-	1	1
1048	Mechanical shaft seal		-	-	1	1
1049	Water-in-oil sensor		1	1	1	1
1050	Shim		-	-	1	1
1051	Retaining ring		-	-	1	1
1052	Plug		1	1	-	1
1053	Connection for protective earthing		-	-	1	1
1054	Lip seal		1	1	-	-
1055	Lip seal		1	1	-	-
1056	Seal washer		-	-	1	1
1119	PTFE tape		1	1	1	1
1158	Nut		1	1	-	-
1173	Seal washer		1	1	1	1

AMG non-ATEX

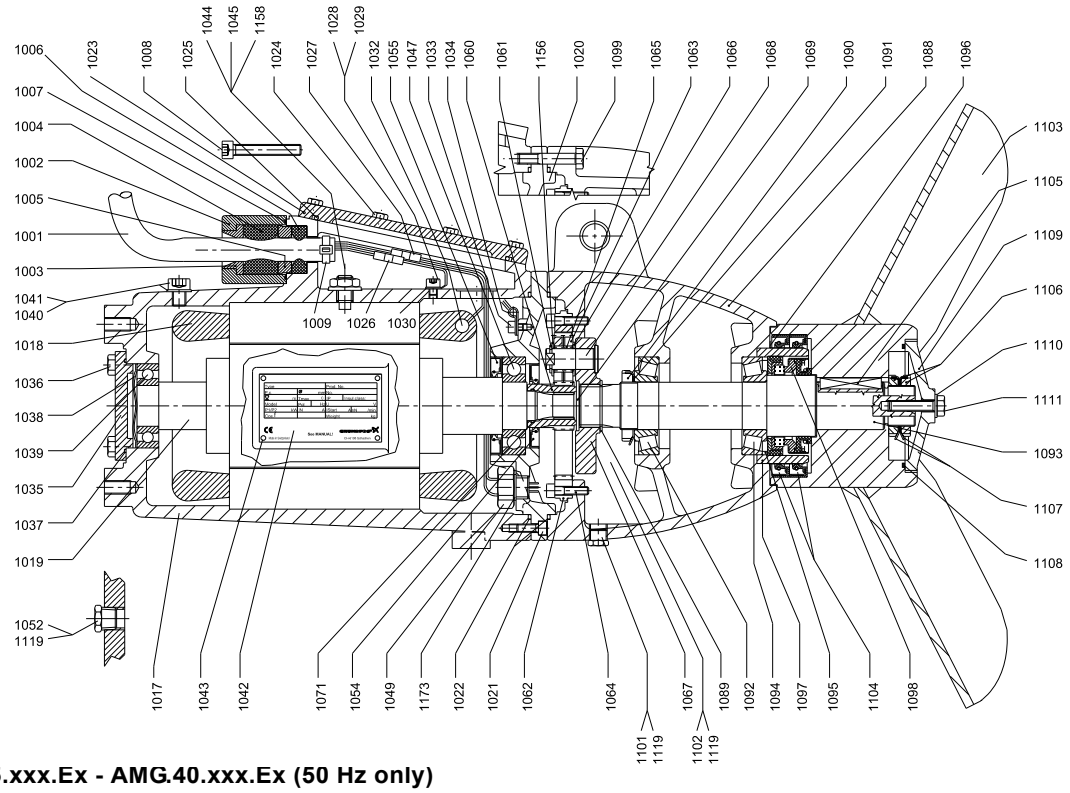

AMG.15.xxx.Ex - AMG.40.xxx.Ex (50 Hz only)

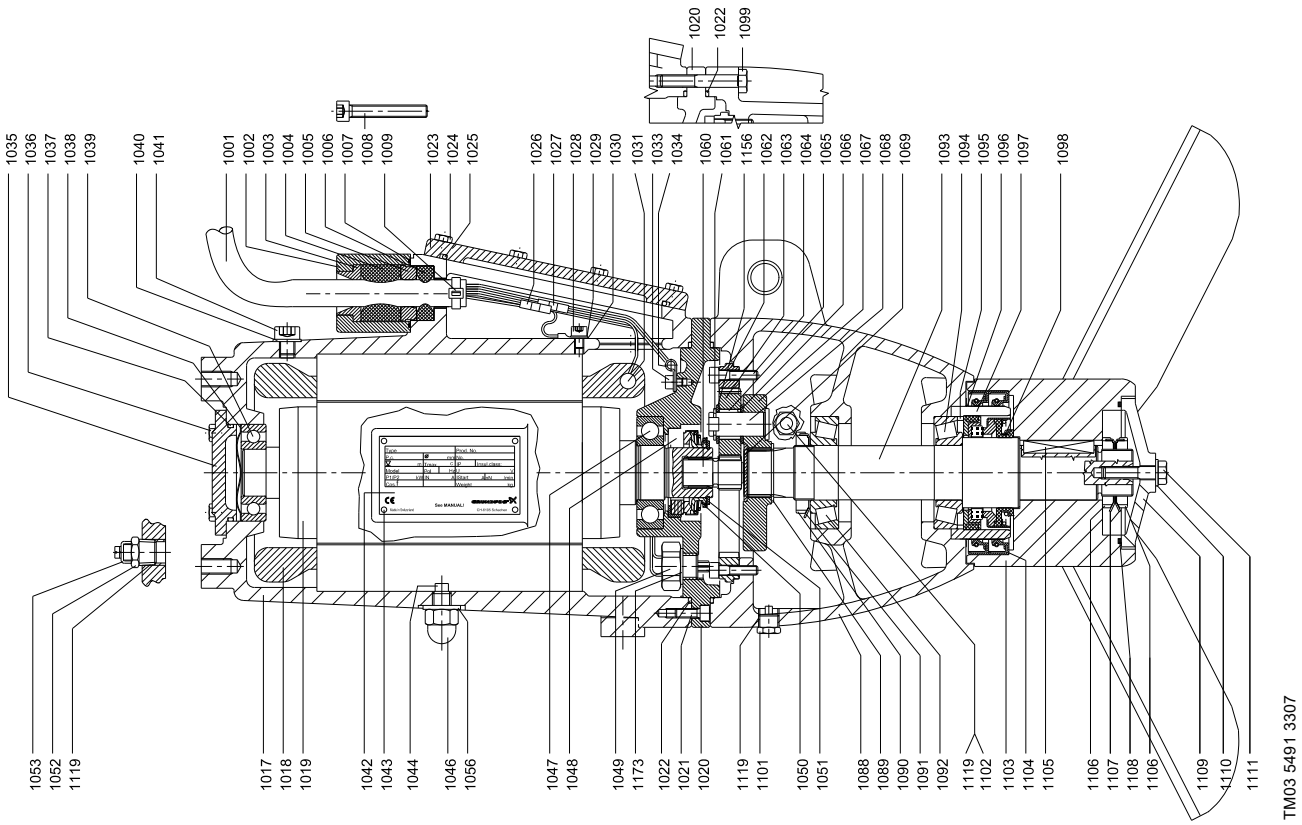

AMG.55-110 (50/60 Hz) and AMG.75-150 (60 Hz North America)

Bearing, motor

Pos.	Description/Kit No	95065466
1038	Compensation disc	1
1039	Ball bearing 6208 2RS	1
1047	Ball bearing 6208 2RS	1

Bearing, motor Ex version (50 Hz only)

Pos.	Description/Kit No	96645955
1038	Compensation disc	1
1039	Ball bearing 6208 2RS	1
1047	Ball bearing 6010 2RS	1

Bearing, gearbox

Pos.	Description/Kit No	95065467
1090	Slotted nut; elastic stop	1
1092	Tapered roller bearing 30209	1
1094	Tapered roller bearing 32209	1

Cable entry, 2.5 mm^2

Pos.	Description/Kit No	95065465
1003	Cable guide	1
1004	cable seal, large	1
1005	Thrust washer	1
1006	cable seal, small	1
1007	O-ring	1
1008	Hexagon socket head cap screw	2
1009	Cable relief	1
1025	O-ring	1
1026	Cable joint	6
1027	Cable joint	4
1030	Cable shoe	1
-	Shrink tube for connections	10

Gasket kit

Pos.	Description/Kit No		95065463
1004	cable seal, large		1
1006	cable seal, small		1
1007	O-ring	54.0 x 3.0	1
1022	O-ring	215.57 x 2.62	2
1025	O-ring	139.29 x 3.53	1
1037	O-ring	75.87 x 2.62	1
1054	Lip seal	72 x 45 x 8	1
1055	Lip seal	80 x 50 x 8	1
1071	O-ring	32.93 x 3.53	1
1108	O-ring	94.92 x 2.62	1

Gasket kit, Ex version (50 Hz only)

Pos.	Description/Kit No		95065464
1004	cable seal, large		1
1006	cable seal, small		1
1007	O-ring	54.0 x 3.0	1
1022	O-ring	215.57 x 2.62	2
1025	O-ring	139.29 x 3.53	1
1037	O-ring	75.87 x 2.62	1
1048	Mechanical shaft seal		1
1050	Shim		1
1051	Retaining ring		1
1108	O-ring	94.92 x 2.62	1

Gear housing

Pos.	Description/Kit No	95038481
1088	Gear housing	1
1090	Slotted nut KM9; elastic stop	1
1092	Tapered roller bearing	1
1093	Gear shaft	1
1094	Tapered roller bearing	1
1101	Drain plug with magnet	1
1102	Plug	2
1119	PTFE tape	1
1164	Retaining ring	1

Radial seal

Pos.	Description/Kit No		95039131
1104	Lip seal	120 x 100 x 12	2
1108	O-ring	94.92 x 2.62	1
	O-ring	184.0 x 3.0	1
	O-ring	225.0 x 3.0	1
1110	Washer	∅10.5 / 20 x 2.0	1
1157	Gasket	96 x 75 x 2	1

Shaft seal

Pos.	Description/Kit No	95065470
1098	Mechanical shaft seal	1

Slotted nut

Pos.	Description/Kit No	95038489
1106	Slotted nut	2
1107	Lock washer	2

Wear ring

Pos.	Description/Kit No		Standard
			95037375
1097	Wear ring ceramic		1
1104	Lip seal	100 x 120 x 12	2
1108	O-ring	94.92 x 2.62	1
	O-ring	184.0 x 3.0	1
	O-ring	225.0 x 3.0	1
1157	Gasket	96 x 75 x 2	1

Water-in-oil sensor

Pos.	Description/Kit No	95038409
1049	Water-in-oil sensor	1
1173	Seal washer	1

AMG non-ATEX

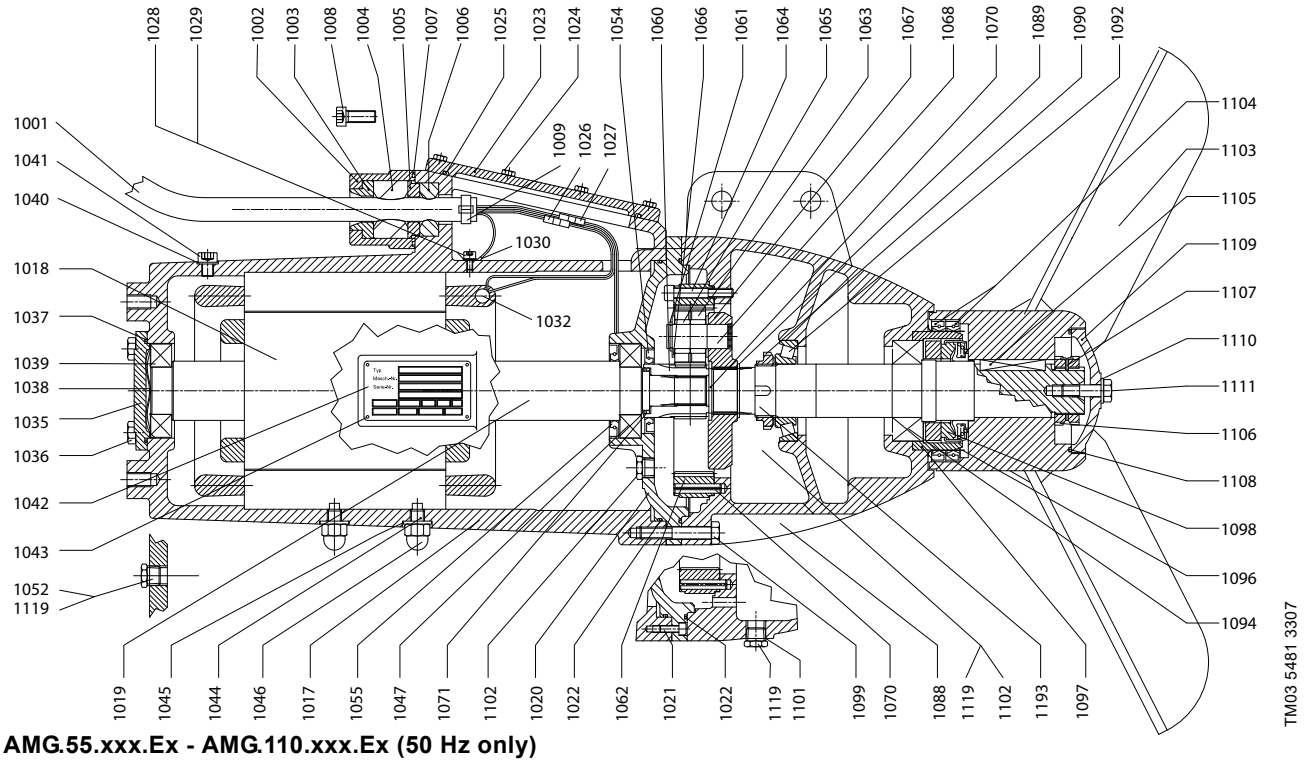

AMG.55.xxx.Ex - AMG.110.xxx.Ex (50 Hz only)

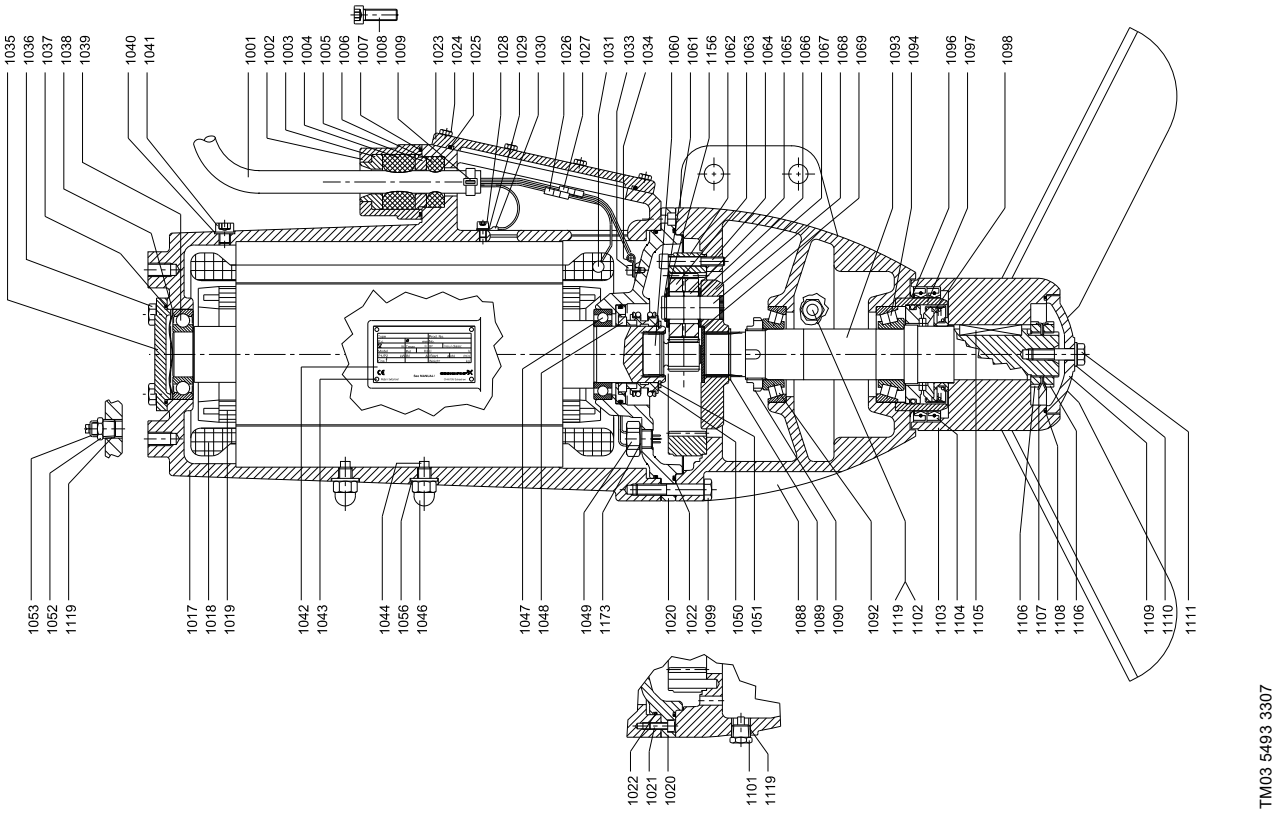

Propeller, AISI 304 (50 Hz)

Pos.	Description/Kit No	AMG.55.50*	AMG.75.58*	AMG.110.68*	AMG.55.73	AMG.75.73	AMG.110.84
		95038469	95038470	95038471	95038475	95038476	95038477
1103	Propeller 5.5 kW	1	-	-	1	-	-
1103	Propeller 7.5 kW	-	1	-	-	1	-
1103	Propeller 11 kW	-	-	1	-	-	1
1104	Lip seal	2	2	2	2	2	2
1105	Parallel key	1	1	1	1	1	1
1106	Slotted nut	2	2	2	2	2	2
1108	O-ring	1	1	1	1	1	1
1109	Hub cover	1	1	1	1	1	1
1110	Washer	1	1	1	1	1	1
1111	Hexagon head screw	1	1	1	1	1	1

* Old version. Can be updated to the new version with higher efficiency by ordering the kit for the corresponding new version.

Propeller, AISI 316 (50 Hz)

Pos.	Description/Kit No	AMG.55.50*	AMG.75.58*	AMG.110.68*	AMG.55.73	AMG.75.73	AMG.110.84
		95038472	95038473	95038474	95038478	95038479	95038480
1103	Propeller 5.5 kW	1	-	-	1	-	-
1103	Propeller 7.5 kW	-	1	-	-	1	-
1103	Propeller 11 kW	-	-	1	-	-	1
1104	Lip seal	2	2	2	2	2	2
1105	Parallel key	1	1	1	1	1	1
1106	Slotted nut	2	2	2	2	2	2
1108	O-ring	1	1	1	1	1	1
1109	Hub cover	1	1	1	1	1	1
1110	Washer	1	1	1	1	1	1
1111	Hexagon head screw	1	1	1	1	1	1

* Old version. Can be updated to the new version with higher efficiency by ordering the kit for the corresponding new version.

Propeller, AISI 304 (60 Hz)

Pos.	Description	60 Hz SI	AMG.55.46*	AMG.75.51*	AMG.110.60*	AMG.55.60	AMG.75.68	AMG.110.73
		60 Hz US	AMG.75.18*	AMG.100.20*	AMG.150.23*	AMG.75.23	AMG.100.27	AMG.150.29
		Kit No	95038732	95038733	95038734	95038738	95038739	95038740
1103	Propeller 5.5 kW / 7.5 Hp		1	-	-	1	-	-
1103	Propeller 7.5 kW / 10 Hp		-	1	-	-	1	-
1103	Propeller 11 kW / 15 Hp		-	-	1	-	-	1
1104	Lip seal		2	2	2	2	2	2
1105	Parallel key		1	1	1	1	1	1
1106	Slotted nut		2	2	2	2	2	2
1108	O-ring		1	1	1	1	1	1
1109	Hub cover		1	1	1	1	1	1
1110	Washer		1	1	1	1	1	1
1111	Hexagon head screw		1	1	1	1	1	1

* Old version. Can be updated to the new version with higher efficiency by ordering the kit for the corresponding new version.

Cable

Pos.	Description/Kit No	95038486	95038487	95038488
1001	Cable	10 m / 30 ft	15 m / 50 ft	25 m / 80 ft
1026	Cable joint	6	6	6
1027	Cable joint	4	4	4
1030	Cable shoe	1	1	1

Gear

Pos.	Description/Kit No	Non-Ex version	Ex version
		95065492	95065495
1060	Sun wheel	1	1
1061	Retaining ring	3	3
1062	Ring gear	1	1
1063	Planet gear	3	3
1065	Roller	114	114
1066	Washer	3	3
1067	Planet carrier	1	1
1068	Planet pin	3	3
1069	Cover	1	1
1071	O-ring	1	-
1156	Washer	3	3

AMG non-ATEX

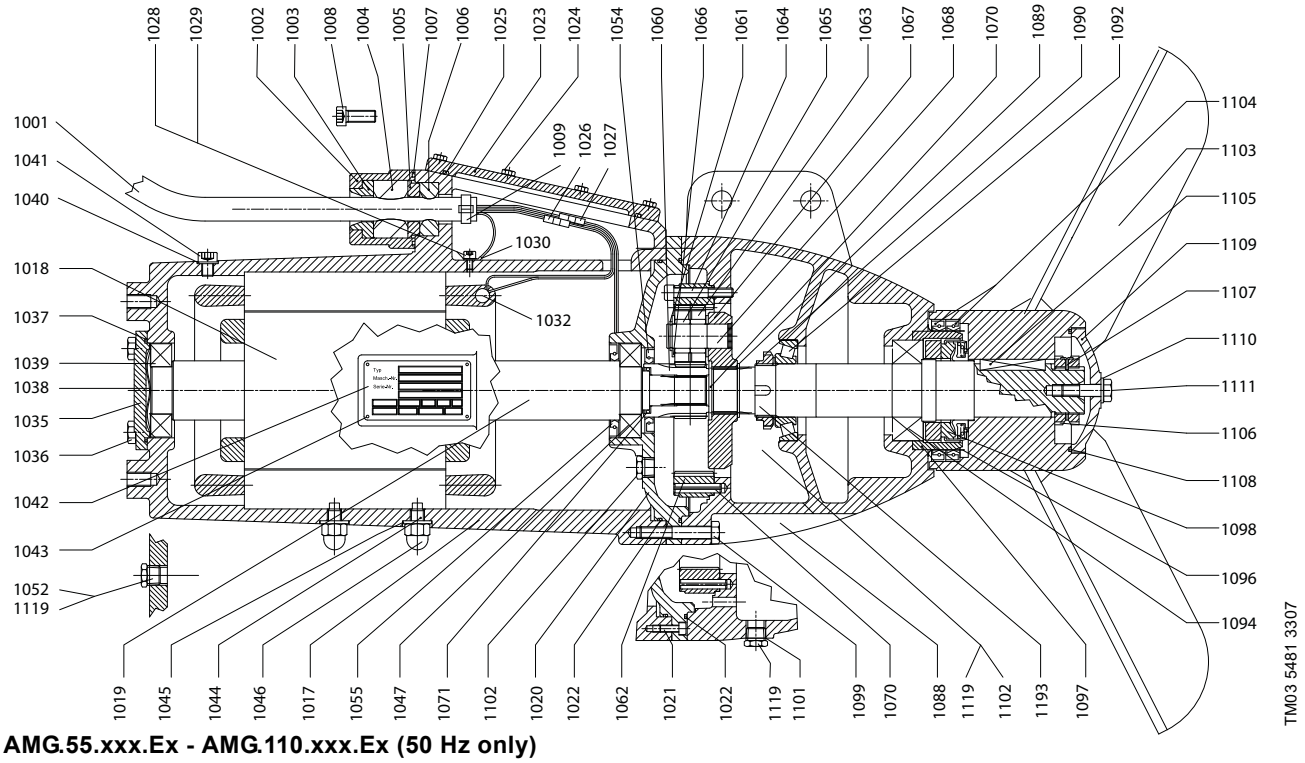

AMG.55.xxx.Ex - AMG.110.xxx.Ex (50 Hz only)

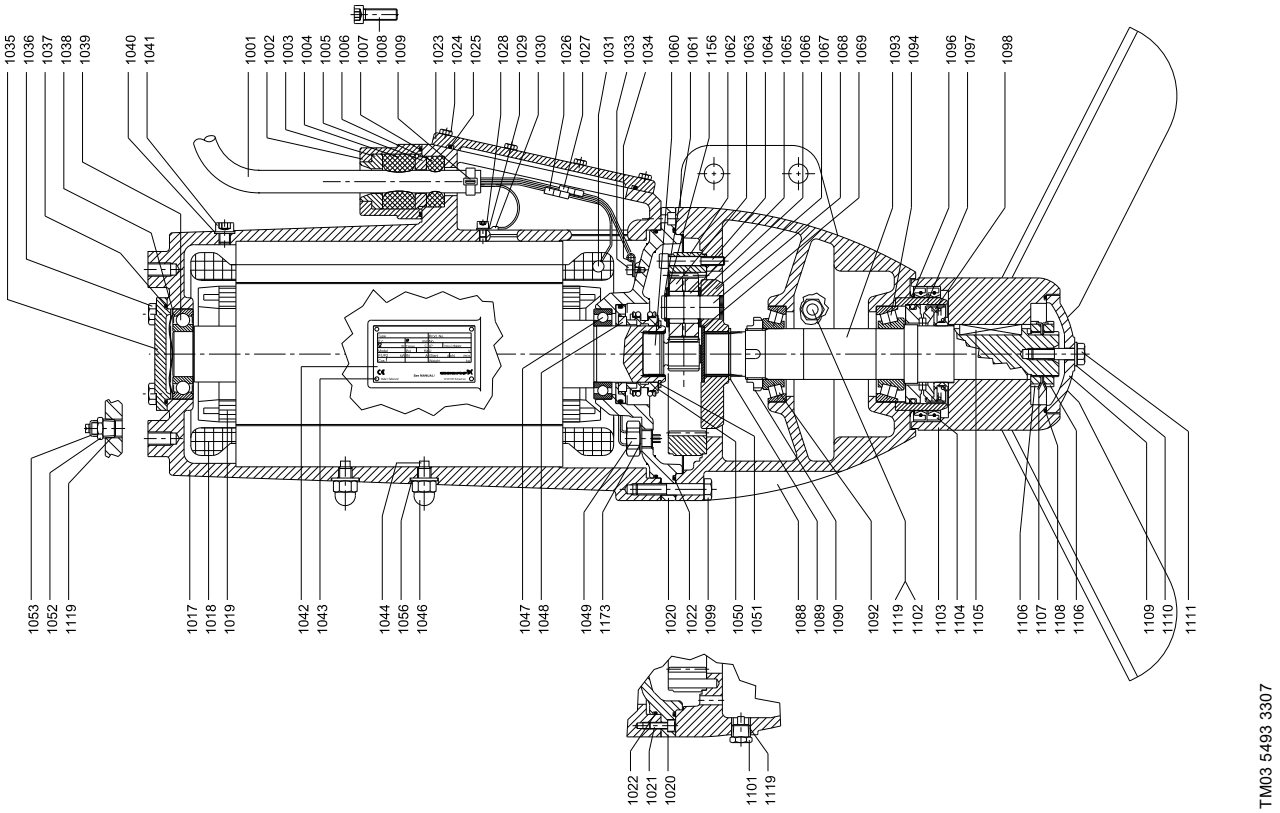

Motor

Pos.	Description		Non-Ex version		Ex version	
		50 Hz	AMG.55.xx AMG.75.xx	AMG.110.xx	AMG.55.xx.Ex AMG.75.xx.Ex	AMG.110.xx.Ex
		60 Hz SI	AMG.55.xx AMG.75.xx	AMG.110.xx	-	-
		60 Hz US	AMG.75.xx AMG.100.xx	AMG.150.xx	-	-
		Kit No	95038482	95038483	95038484	95038485
1002	Cable flange		1	1	1	1
1007	O-ring		1	1	1	1
1008	Hexagon socket head cap screw		2	2	2	2
1017	Motor housing		1	1	1	1
1018	Stator 4-pole 7.5 kW / 10 Hp		1	-	-	-
	Stator 4-pole 9.0 kW Ex		-	-	1	-
	Stator 4-pole 11.0 kW / 15 Hp		-	1	-	-
	Stator 4-pole 14.0 kW Ex		-	-	-	1
1019	Rotor with shaft 4-pole 7.5 kW / 10 Hp		1	-	-	-
	Rotor with shaft 4-pole 9.0 kW Ex		-	-	1	-
	Rotor with shaft 4-pole 11.0 kW / 15 Hp		-	1	-	-
	Rotor with shaft 4-pole 14.0 kW Ex		-	-	-	1
1020	Motor flange		1	1	1	1
1021	Hexagon socket head cap screw		3	3	3	3
1022	O-ring		2	2	2	2
1023	Terminal box cover		1	1	1	1
1024	Hexagon head screw		8	8	8	8
1025	O-ring		1	1	1	1
1028	Hexagon socket head cap screw		1	1	1	1
1029	Lock washer		1	1	1	1
1033	Hexagon socket head cap screw		1	1	1	1
1034	Cable clamp		1	1	1	1
1035	Bearing cover		1	1	1	1
1036	Hexagon head screw		4	4	4	4
1037	O-ring		1	1	1	1
1038	Compensation disc		1	1	1	1
1039	Ball bearing		1	1	-	-
	Ball bearing		-	-	1	1
1040	Washer		1	1	1	1
1041	Hexagon socket head cap screw		1	1	1	1
1044	Set screw		2	2	2	2
1046	Nut		2	2	2	2
1047	Ball bearing		1	1	-	-
	Ball bearing		-	-	1	1
1048	Mechanical shaft seal		-	-	1	1
1049	Water-in-oil sensor		1	1	1	1
1050	Shim		-	-	1	1
1051	Retaining ring		-	-	1	1
1052	Plug		1	1	1	1
1053	Connection for protective earthing		-	-	1	1
1054	Lip seal		1	1	-	-
1055	Lip seal		1	1	-	-
1056	Seal washer		2	2	2	2
1119	PTFE tape		1	1	1	1
1173	Seal washer		1	1	1	1

Propeller, AISI 316 (60 Hz)

Pos.	Description	60 Hz SI	AMG.55.46*	AMG.75.51*	AMG.110.60*	AMG.55.60	AMG.75.68	AMG.110.73
		60 Hz US	AMG.75.18*	AMG.100.20*	AMG.150.23*	AMG.75.23	AMG.100.27	AMG.150.29
		Kit No	95038735	95038736	95038737	95038741	95038742	95038743
1103	Propeller 5.5 kW / 7.5 Hp		1	-	-	1	-	-
1103	Propeller 7.5 kW / 10 Hp		-	1	-	-	1	-
1103	Propeller 11 kW / 15 Hp		-	-	1	-	-	1
1104	Lip seal		2	2	2	2	2	2
1105	Parallel key		1	1	1	1	1	1
1106	Slotted nut		2	2	2	2	2	2
1108	O-ring		1	1	1	1	1	1
1109	Hub cover		1	1	1	1	1	1
1110	Washer		1	1	1	1	1	1
1111	Hexagon head screw		1	1	1	1	1	1

* Old version. Can be updated to the new version with higher efficiency by ordering the kit for the corresponding new version.

AMG non-ATEX

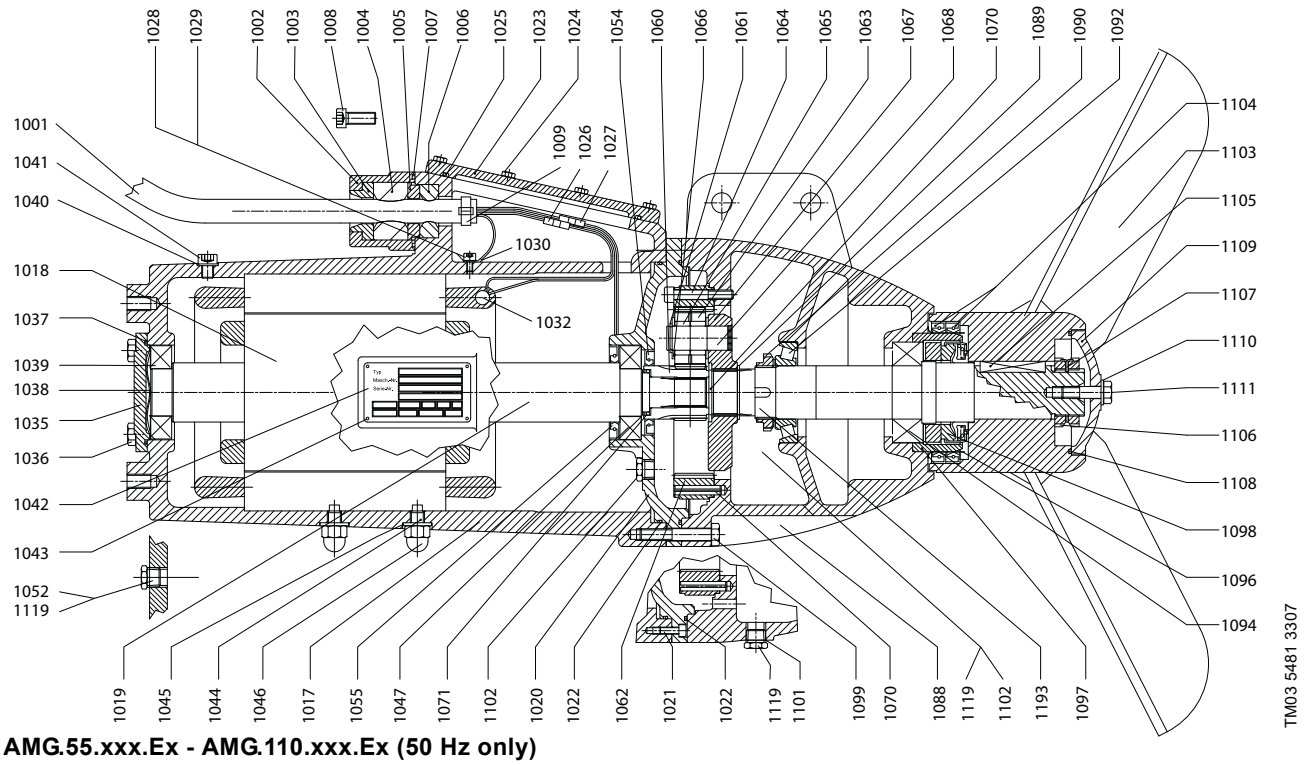

AMG.55.xxx.Ex - AMG.110.xxx.Ex (50 Hz only)

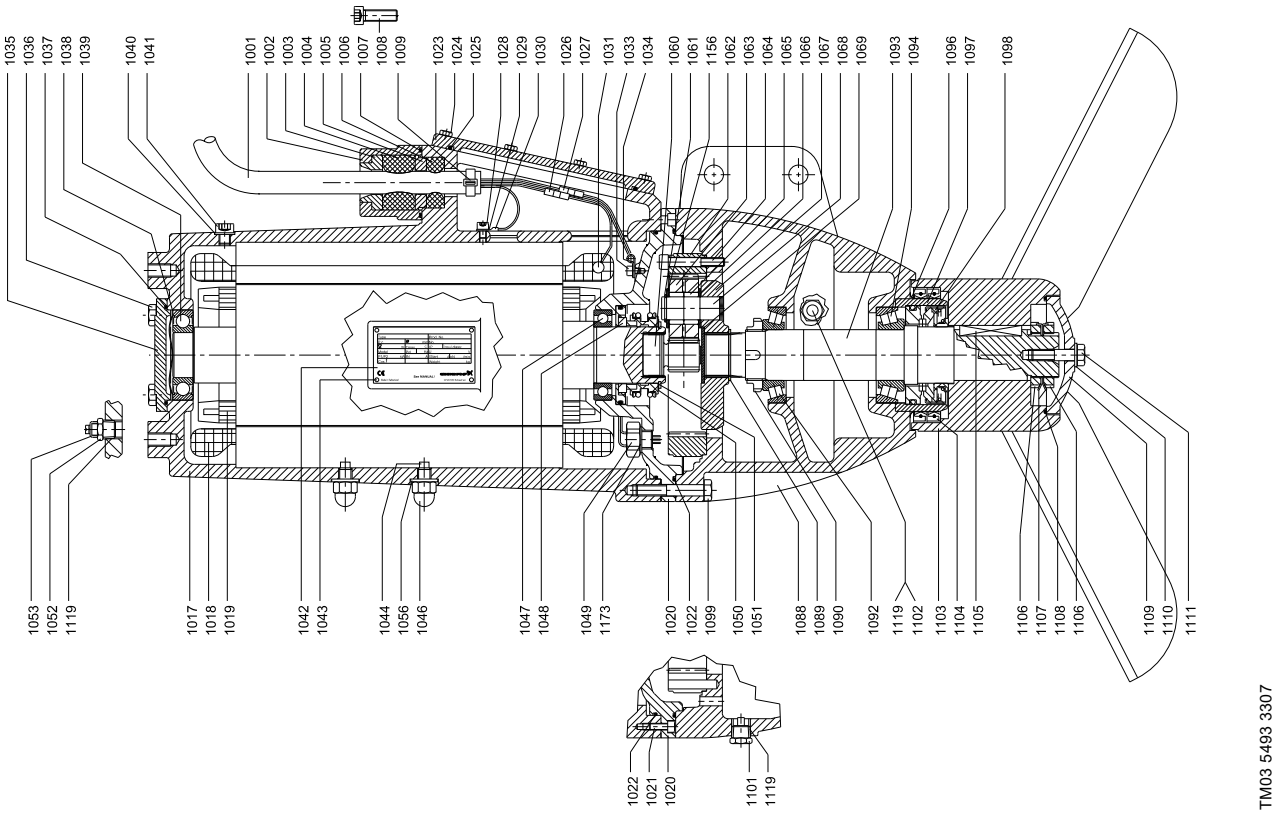

AMG.150-185 (50/60 Hz) and AMG.200-250 (60 Hz North America)

Bearing, motor

Pos.	Description/Kit No	95065474
1038	Compensation disc	1
1039	Ball bearing 6210 2RS	1
1047	Ball bearing 6210 2RS	1

Bearing, gearbox

Pos.	Description/Kit No	95065475
1090	Slotted nut	1
1091	Lock washer	1
1092	Tapered roller bearing 30212	1
1094	Tapered roller bearing 33212	1

Cable

Pos.	Description/Kit No	95038520	95038521	95038522
1001	Cable	10 m / 30 ft	15 m / 50 ft	25 m / 80 ft
1026	Cable joint	6	6	6
1027	Cable joint	4	4	4
1030	Cable shoe	1	1	1

Cable entry, 4 mm^2

Pos.	Description/Kit No		95065473
1003	Cable guide		1
1004	cable seal, large		1
1005	Thrust washer		1
1006	cable seal, small		1
1007	O-ring	54.0 x 3.0	1
1008	Hexagon socket head cap screw		2
1009	Cable relief		1
1025	O-ring	139.29 x 3.53	1
1026	Cable joint		6
1027	Cable joint		4
1030	Cable shoe		1
-	Shrink tube for connections		6
-	Shrink tube for connections		4

Gasket kit

Pos.	Description/Kit No		95065471
1004	cable seal, large		1
1006	cable seal, small		1
1007	O-ring	54.0 x 3.0	1
1022	O-ring	253.59 x 3.53	2
1025	O-ring	139.29 x 3.53	1
1037	O-ring	91.67 x 3.53	1
1054	Lip seal	80 x 55 x 10	1
1055	Lip seal	90 x 58 x 10	1
1071	O-ring	37.77 x 2.62	1
1108	O-ring	120.2 x 3.53	1

Gasket kit, Ex version (50 Hz only)

Pos.	Description/Kit No		95065472
1004	cable seal, large		1
1006	cable seal, small		1
1007	O-ring	54.0 x 3.0	1
1022	O-ring	253.59 x 3.53	2
1025	O-ring	139.29 x 3.53	1
1037	O-ring	91.67 x 3.53	1
1048	Mechanical shaft seal		1
1050	Shim		1
1051	Retaining ring		1
1108	O-ring	120.2 x 3.53	1

Gear

Pos.	Description/Kit No	Non-Ex version	Ex version
		95065493	95065496
1060	Sun wheel	1	1
1061	Retaining ring	3	3
1062	Ring gear	1	1
1063	Planet gear	3	3
1065	Roller	108	108
1066	Washer	3	3
1067	Planet carrier	1	1
1068	Planet pin	3	3
1069	Cover	1	1
1071	O-ring	1	-
1156	Washer	3	3

Gear housing

Pos.	Description/Kit No	95038516
1088	Gear housing	1
1090	Slotted nut	1
1091	Lock washer	1
1092	Tapered roller bearing	1
1093	Gear shaft	1
1094	Tapered roller bearing	1
1101	Drain plug with magnet	1
1102	Plug	2
1119	PTFE tape	1

Radial seal

Pos.	Description/Kit No		95039132
1104	Lip seal		2
1108	O-ring	120.2 x 3.53	1
	O-ring	225.0 x 3.0	1
	O-ring	94.92 x 2.62	1
1110	Washer	∅13 / 24 x 1.5	1

Shaft seal

Pos.	Description/Kit No	95065478
1095	Intermediate ring	1
1098	Mechanical shaft seal	1

Slotted nut

Pos.	Description/Kit No	95038523
1106	Slotted nut	2
1107	Lock washer	2

Water-in-oil sensor

Pos.	Description/Kit No	95038409
1049	Water-in-oil sensor	1
1173	Seal washer	1

Wear ring

Pos.	Description/Kit No		Standard
			95037376
1097	Wear ring ceramic		1
1104	Lip seal		2
1108	O-ring	120.2 x 3.53	1
	O-ring	225.0 x 3.0	1
	O-ring	94.92 x 2.62	1

AMG non-ATEX

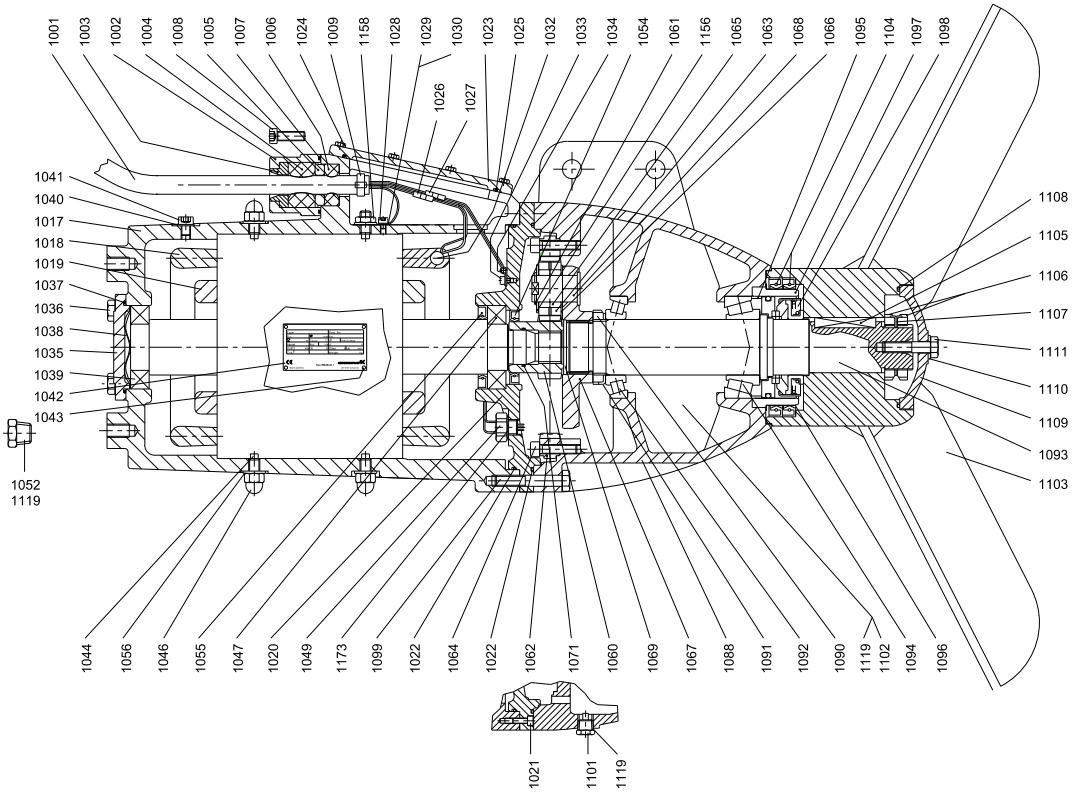

TM03 5484 3307

AMG.150.xx.Ex - AMG.185.xx.Ex (50 Hz only)

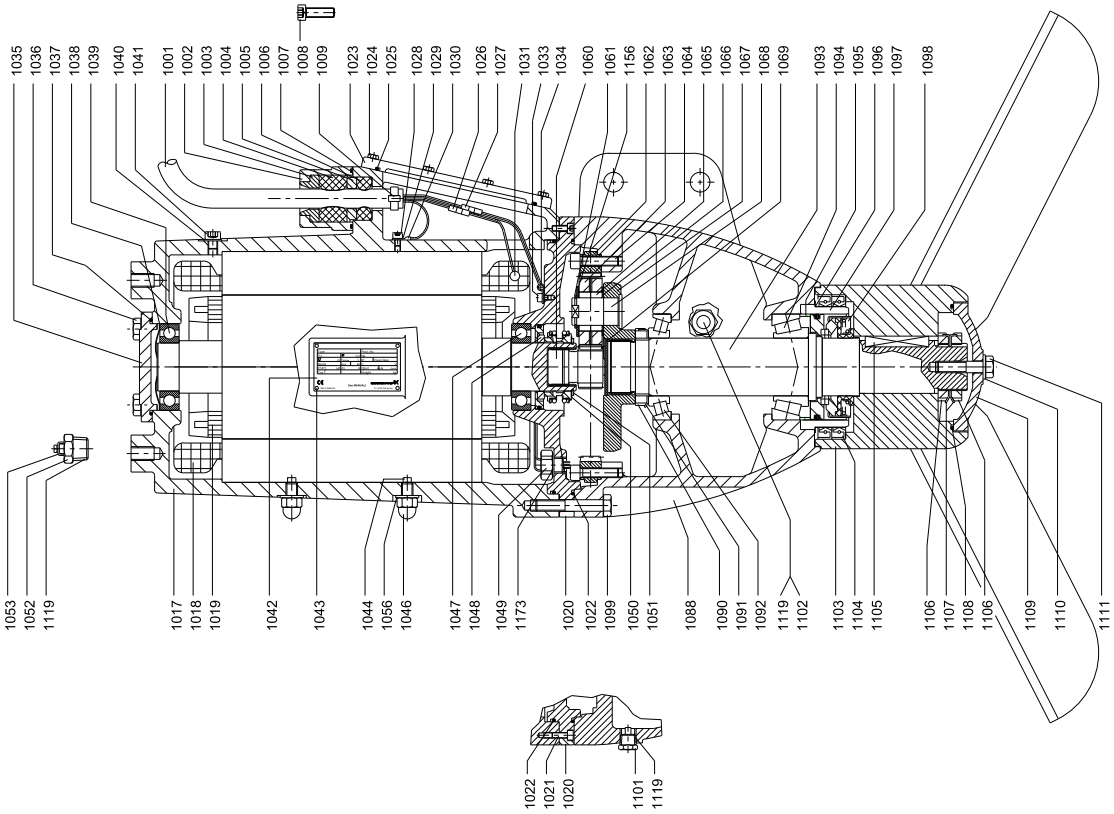

TM03 5496 3307

Propeller, AISI 304 (50 Hz)

Pos.	Description/Kit No	AMG.150.73*	AMG.185.78*	AMG.150.90	AMG.185.91
		95038508	95038509	95038512	95038513
1103	Propeller 15.0 kW	1	-	1	-
	Propeller 18.5 kW	-	1	-	1
1104	Lip seal	2	2	2	2
1105	Parallel key	1	1	1	1
1106	Slotted nut	2	2	2	2
1108	O-ring	1	1	1	1
1109	Hub cover	1	1	1	1
1110	Washer	1	1	1	1
1111	Hexagon head screw	1	1	1	1

Propeller, AISI 316 (50 Hz)

Pos.	Description/Kit No	AMG.150.73*	AMG.185.78*	AMG.150.90	AMG.185.91
		95038510	95038511	95038514	95038515
1103	Propeller 15.0 kW	1	-	1	-
	Propeller 18.5 kW	-	1	-	1
1104	Lip seal	2	2	2	2
1105	Parallel key	1	1	1	1
1106	Slotted nut	2	2	2	2
1108	O-ring	1	1	1	1
1109	Hub cover	1	1	1	1
1110	Washer	1	1	1	1
1111	Hexagon head screw	1	1	1	1

Propeller, AISI 304 (60 Hz)

Pos.	Description	60 Hz SI	AMG.150.75	AMG.185.75
		60 Hz US	AMG.200.30	AMG.250.30
		Kit No	95038744	95038745
1103	Propeller 15.0 kW		1	-
	Propeller 18.5 kW		-	1
1104	Lip seal		2	2
1105	Parallel key		1	1
1106	Slotted nut		2	2
1108	O-ring		1	1
1109	Hub cover		1	1
1110	Washer		1	1
1111	Hexagon head screw		1	1

Propeller, AISI 316 (60 Hz)

Pos.	Description	60 Hz SI	AMG.150.75	AMG.185.75
		60 Hz US	AMG.200.30	AMG.250.30
		Kit No	95038746	95038747
1103	Propeller 15.0 kW		1	-
	Propeller 18.5 kW		-	1
1104	Lip seal		2	2
1105	Parallel key		1	1
1106	Slotted nut		2	2
1108	O-ring		1	1
1109	Hub cover		1	1
1110	Washer		1	1
1111	Hexagon head screw		1	1

* Old version. Can be updated to the new version with higher efficiency by ordering the kit for the corresponding new version.

AMG non-ATEX

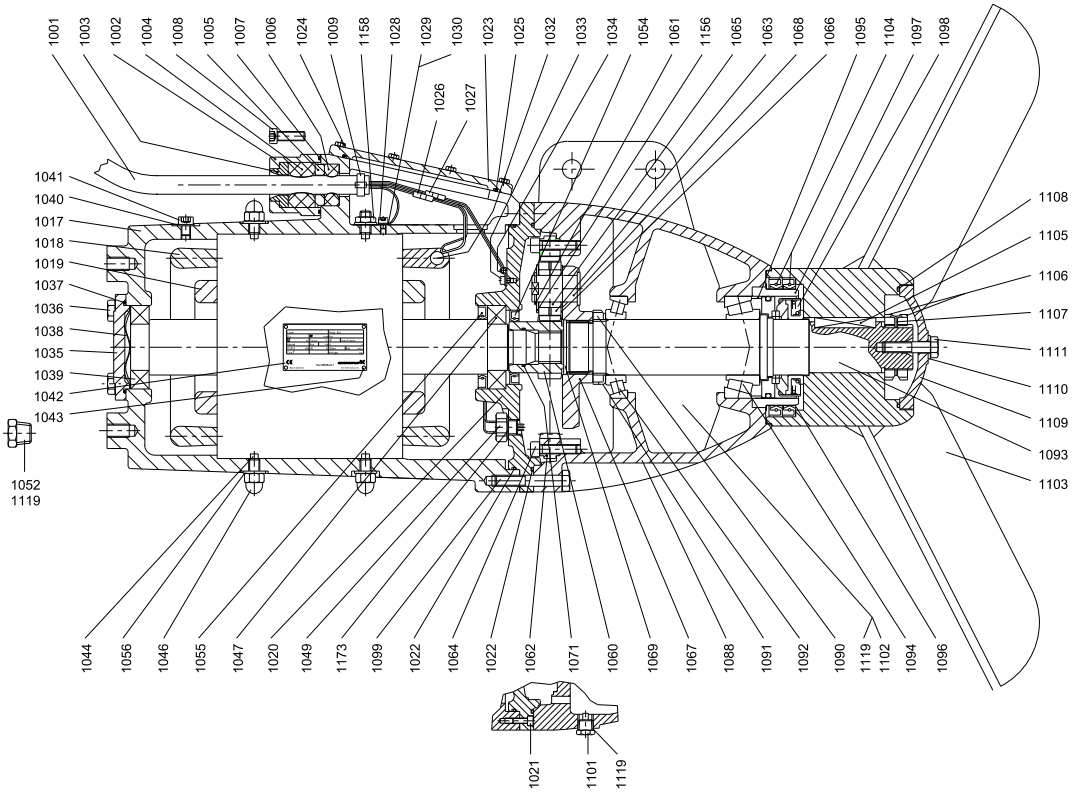

TM03 5484 3307

AMG.150.xx.Ex - AMG.185.xx.Ex (50 Hz only)

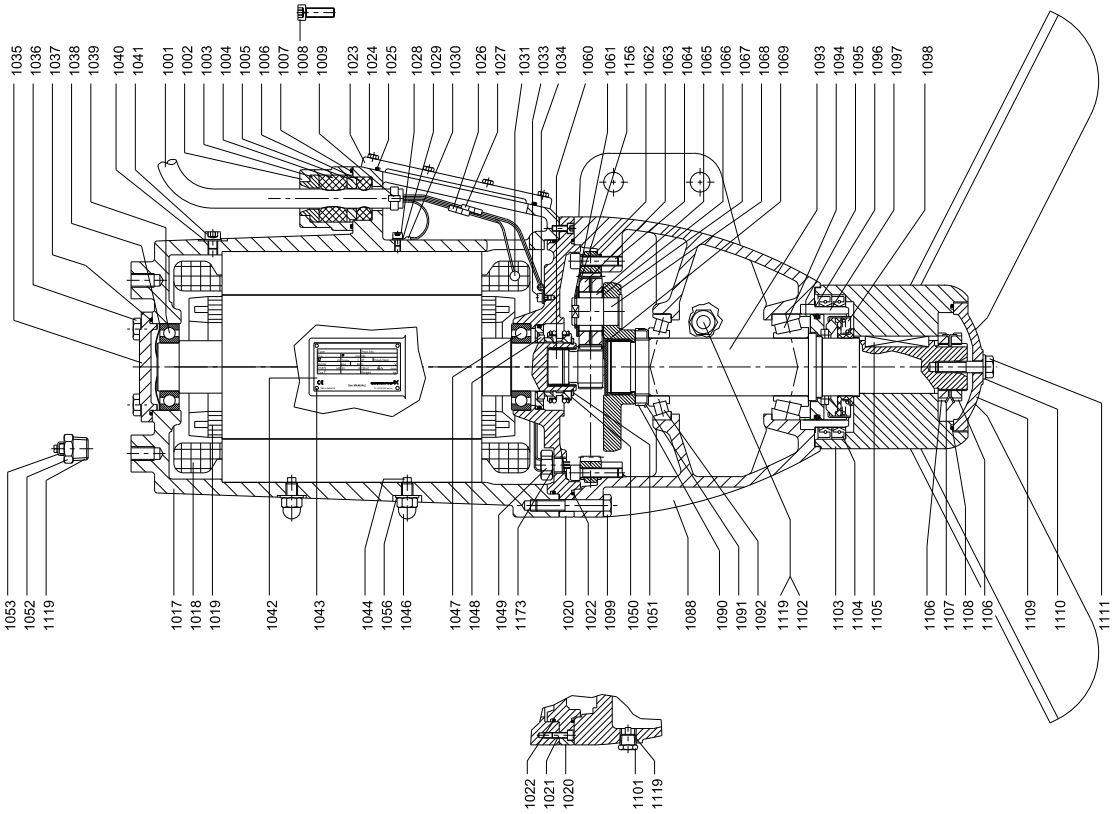

TM03 5496 3307

Motor

Pos.	Description		Non-Ex version	Ex version	
		50 Hz	AMG.150.xx AMG.185.xx	AMG.150.xx.Ex	AMG.xx.185.Ex
		60 Hz SI	AMG.150.xx AMG.185.xx	-	-
		60 Hz US	AMG.200.xx AMG.250.xx	-	-
		Kit No	95038517	95038518	95038519
1002	Cable flange		1	1	1
1007	O-ring		1	1	1
1008	Hexagon socket head cap screw		2	2	2
1017	Motor housing		1	1	1
1018	Stator 4-pole 18.5 kW / 25 Hp		1	-	-
	Stator 4-pole 18.0 kW Ex		-	1	-
	Stator 4-pole 22.0 kW Ex		-	-	1
1019	Rotor with shaft 4-pole 18.5 kW / 25 Hp		1	-	-
	Rotor with shaft 4-pole 18.0 kW Ex		-	1	-
	Rotor with shaft 4-pole 24.0 kW Ex		-	-	1
1020	Motor flange		1	1	1
1021	Hexagon socket head cap screw		6	6	6
1022	O-ring		2	2	2
1023	Terminal box cover		1	1	1
1024	Hexagon head screw		8	8	8
1025	O-ring		1	1	1
1028	Hexagon socket head cap screw		1	1	1
1029	Lock washer		1	1	1
1033	Hexagon socket head cap screw		1	1	1
1034	Cable clamp		1	1	1
1035	Bearing cover		1	1	1
1036	Hexagon head screw		4	4	4
1037	O-ring		1	1	1
1038	Compensation disc		1	1	1
1039	Ball bearing		1	-	-
	Ball bearing		-	1	1
1040	Washer		1	1	1
1041	Hexagon socket head cap screw		1	1	1
1044	Set screw		4	2	2
1046	Nut		3	2	2
1047	Ball bearing		1	-	-
	Ball bearing		-	1	1
1048	Mechanical shaft seal		-	1	1
1049	Water-in-oil sensor		1	1	1
1050	Shim		-	1	1
1051	Retaining ring		-	1	1
1052	Plug		1	1	1
1053	Connection for protective earthing		-	1	1
1054	Lip seal		1	-	-
1055	Lip seal		1	-	-
1056	Seal washer		4	2	2
1119	PTFE tape		1	1	1
1158	Nut		1	-	-
1173	Seal washer		1	1	1

AMG non-ATEX

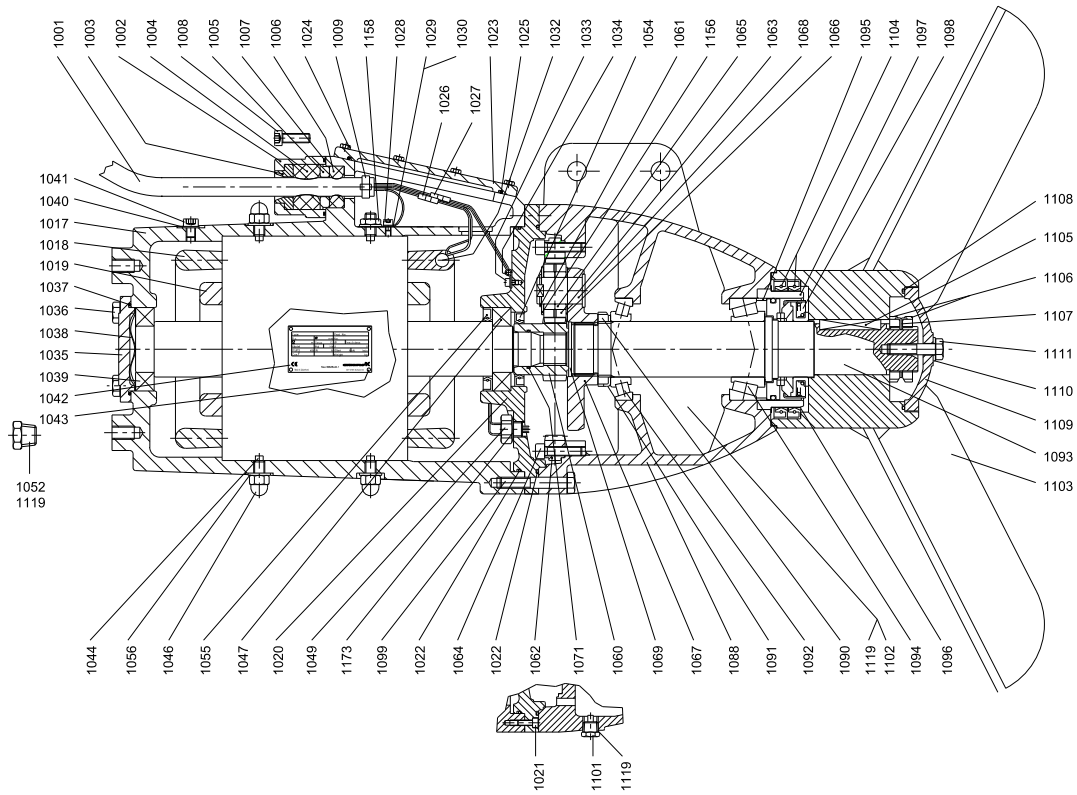

TM03 5484 3307

AMG.150.xx.Ex - AMG.185.xx.Ex (50 Hz only)

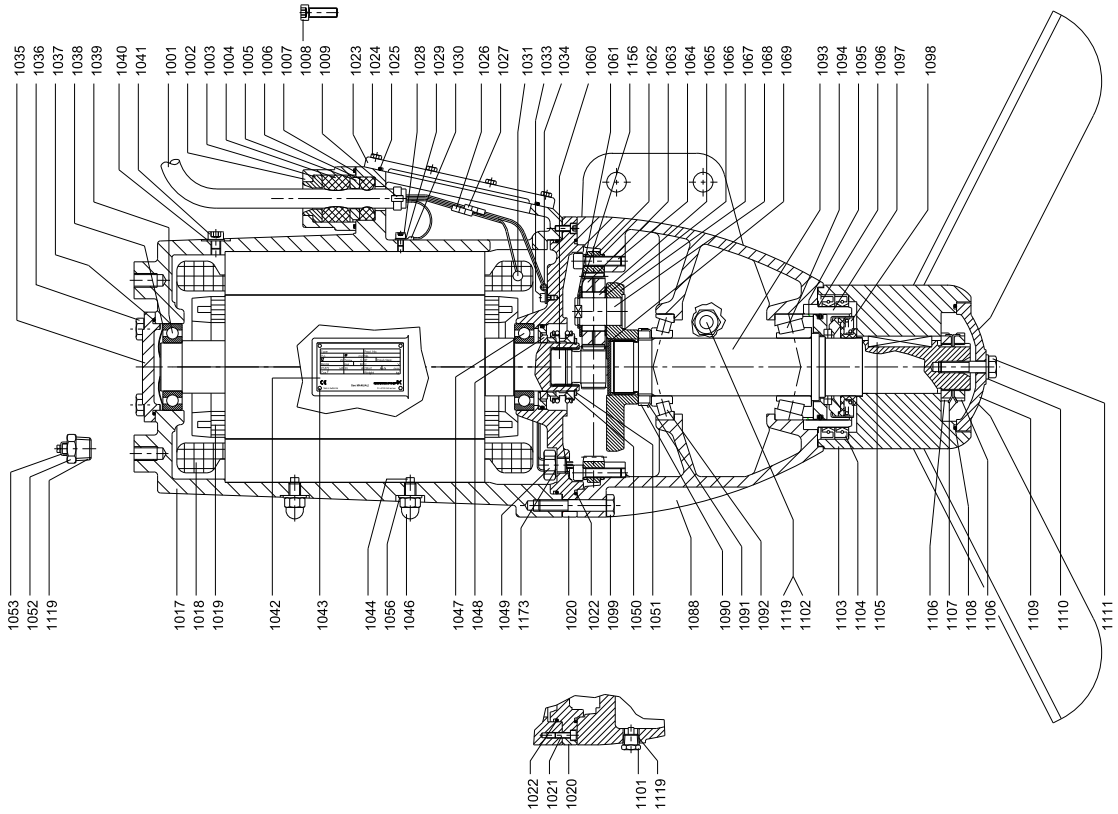

TM03 5496 3307

AFG

AFG.xx.130.xx (50/60 Hz) and AFG.xx.51.xx (60 Hz North America)

Bearing, motor

Pos.	Description/Kit No		95065458
1038	Compensation disc		1
1039	Ball bearing 6206 2RS		1
1047	Ball bearing 6207 2RS		1

Bearing, gearbox

Pos.	Description/Kit No		95065459
1090	Slotted nut		1
1091	Lock washer		1
1092	Tapered roller bearing 30207		1
1094	Tapered roller bearing 30207		1

Cable entry, 1.5 mm²

Pos.	Description/Kit No		95065457
1003	Cable guide		1
1004	cable seal, large		1
1005	Thrust washer		1
1006	cable seal, small		1
1007	O-ring	37.82 x 1.78	1
1008	Hexagon socket head cap screw		2
1009	Cable relief		1
1025	O-ring	113.97 x 2.62	1
1026	Cable joint		6
1027	Cable joint		4
1030	Cable shoe		1
-	Shrink tube for connections		10

Gear housing

Pos.	Description/Kit No		95038404
1088	Gear housing		1
1090	Slotted nut		1
1091	Lock washer		1
1092	Tapered roller bearing		1
1093	Gear shaft		1
1094	Tapered roller bearing		1
1101	Drain plug with magnet		1
1102	Plug		2
1119	PTFE tape		1
1164	Retaining ring		1

Gasket kit

Pos.	Description/Kit No		95065479
1004	cable seal, large		1
1006	cable seal, small		1
1007	O-ring	37.82 x 1.78	1
1022	O-ring	158.42 x 2.62	3
1025	O-ring	113.97 x 2.62	1
1037	O-ring	63.22 x 1.78	1
1054	Lip seal	62 x 32 x 8	1
1055	Lip seal	72 x 40 x 7	1
1071	O-ring	21.95 x 1.78	1
1157	Gasket	96 x 75 x 2	1

Gasket kit, Ex version (50 Hz Only)

Pos.	Description/Kit No		95065480
1004	cable seal, large		1
1006	cable seal, small		1
1007	O-ring	37.82 x 1.78	1
1022	O-ring	158.42 x 2.62	3
1025	O-ring	113.97 x 2.62	1
1037	O-ring	56.82 x 2.62	1
1048	Mechanical shaft seal		1
1050	Shim		1
1051	Retaining ring		1
1157	Gasket	96 x 75 x 2	1

Radial seal

Pos.	Description/Kit No		95039130
1104	Lip seal		2
1108	O-ring	85.0 x 2.5	1
	O-ring	105.0 x 3.0	1
	O-ring	184.0 x 3.0	1
1110	Washer	∅8.4 / 16 x 1.6	1
1157	Gasket	96 x 75 x 2	1

Shaft seal

Pos.	Description/Kit No	95065462
1095	Intermediate ring	1
1098	Mechanical shaft seal	1

Slotted nut

Pos.	Description/Kit No	95038413
1106	Slotted nut	2
1107	Lock washer	2

Water-in-oil sensor

Pos.	Description/Kit No	95038409
1049	Water-in-oil sensor	1
1173	Seal washer	1

Wear ring

Pos.	Description/Kit No		Standard 95037374
1097	Wear ring ceramic		1
1104	Lip seal	105 x 85 x 13	2
1108	O-ring	85.0 x 2.5	1
	O-ring	105.0 x 3.0	1
	O-ring	184.0 x 3.0	1
1157	Gasket	96 x 75 x 2	1

AFG non-ATEX

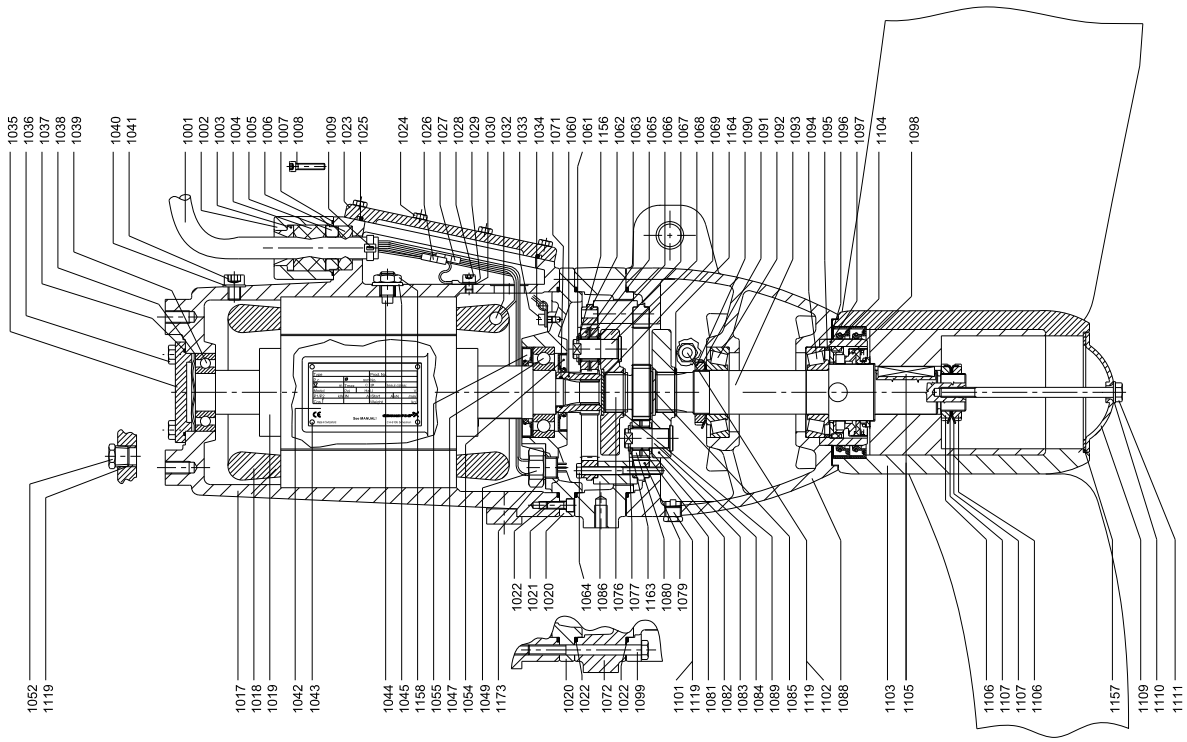

AFG.xx.130.xx.Ex (50 Hz only)

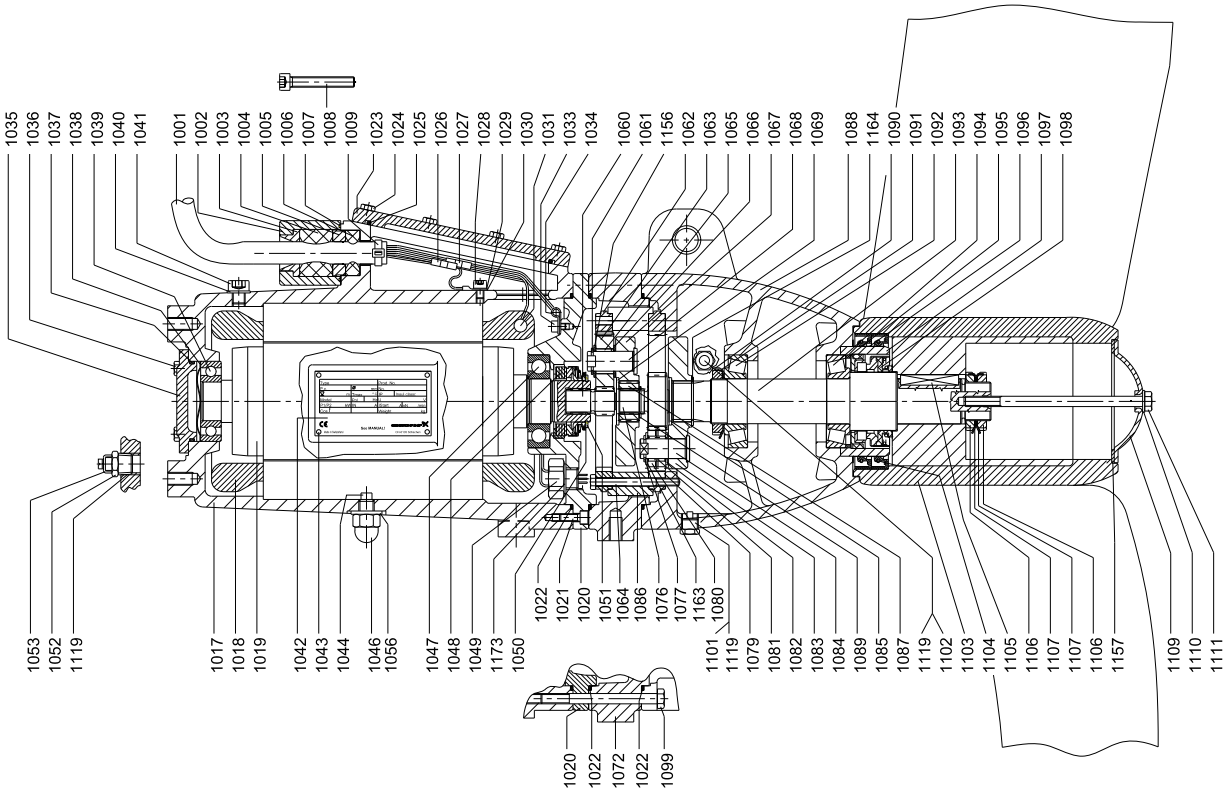

Cable

Pos.	Description/Kit No	95038410	95038411	95038412
1001	Cable	10 m / 30 ft	15 m / 50 ft	25 m / 80 ft
1026	Cable joint	6	6	6
1027	Cable joint	4	4	4
1030	Cable shoe	1	1	1

Gear

Pos.	Description		Non-Ex version					Ex version (50 Hz only)		
		50 Hz	All	AFG.11.130	AFG.15.130 AFG.22.130	AFG.30.130 AFG.40.130	AFG.08.130	All	AFG.15.130 AFG.22.130	AFG.30.130 AFG.40.130
		60 Hz SI			AFG.30.130 AFG.40.130	-	AFG.14.130 AFG.18.130		-	
		60 Hz US			AFG.40.51 AFG.55.51	-	AFG.19.51 AFG.24.51		-	
			Step 1	Step 2	Step 2	Step 2	Step 2	Step 1	Step 2	Step 2
		Kit No	95065491	95038770	95038554	95038555	95038748	95065494	95038554	95038555
1060	Sun wheel		1	-	-	-	-	1	-	-
1061	Retaining ring		3	-	-	-	-	3	-	-
1062	Ring gear		1	-	-	-	-	1	-	-
1063	Planet gear		3	-	-	-	-	3	-	-
1065	Roller		81	-	-	-	-	81	-	-
1066	Washer		3	-	-	-	-	3	-	-
1067	Planet carrier		1	-	-	-	-	1	-	-
1068	Planet pin		3	-	-	-	-	3	-	-
1069	Cover		1	-	-	-	-	1	-	-
1071	O-ring		1	-	-	-	-	-	-	-
1076	Sun wheel i = 4.83		-	1	-	-	-	-	-	-
	Sun wheel i = 4.28		-	-	1	-	-	-	1	-
	Sun wheel i = 3.55		-	-	-	1	-	-	-	1
	Sun wheel i = 5.6		-	-	-	-	1	-	-	-
1077	Retaining ring A15		-	3	3	3	3	-	3	3
1079	Ring gear Z=69		-	1	1	1	1	-	1	1
1080	Planet gear i = 4.83		-	3	-	-	-	-	-	-
	Planet gear i = 4.28		-	-	3	-	-	-	3	-
	Planet gear i = 3.55		-	-	-	3	-	-	-	3
	Planet gear i = 5.6		-	-	-	-	3	-	-	-
1081	Roller		-	81	81	81	81	-	81	81
1082	Washer		-	3	3	3	3	-	3	3
1083	Planet carrier i= 4.83		-	1	-	-	-	-	-	-
	Planet carrier i = 4.28		-	-	1	-	-	-	1	-
	Planet carrier i = 3.55		-	-	-	1	-	-	-	1
	Planet carrier i=5.6		-	-	-	-	1	-	-	-
1084	Planet pin		-	3	3	3	3	-	3	3
1085	Cover		-	1	1	1	1	-	1	1
1087	Gear coupling		-	1	-	-	1	-	1	1
1089	Retaining ring A32		-	1	1	1	1	-	1	1
1156	Washer		3	-	-	-	-	3	-	-
1163	Washer		-	3	3	3	3	-	3	3

Propeller

Pos.	Description					
		50 Hz	AFG.08.130 AFG.11.130 AFG.15.130	AFG.22.130	AFG.30.130	AFG.40.130
		60 Hz SI	AFG.14.130	AFG.18.130	AFG.30.130	AFG.40.130
		60 Hz US	AFG.19.51	AFG.24.51	AFG.40.51	AFG.55.51
		Kit No	95038541	95038542	95038543	95038544
1103	Propeller		1	1	1	1
1104	Lip seal		2	2	2	2
1105	Parallel key		1	1	1	1
1106	Slotted nut		2	2	2	2
1109	Hub cover		1	1	1	1
1110	Washer		1	1	1	1
1111	Hexagon head screw		1	1	1	1
1157	Gasket		1	1	1	1

AFG non-ATEX

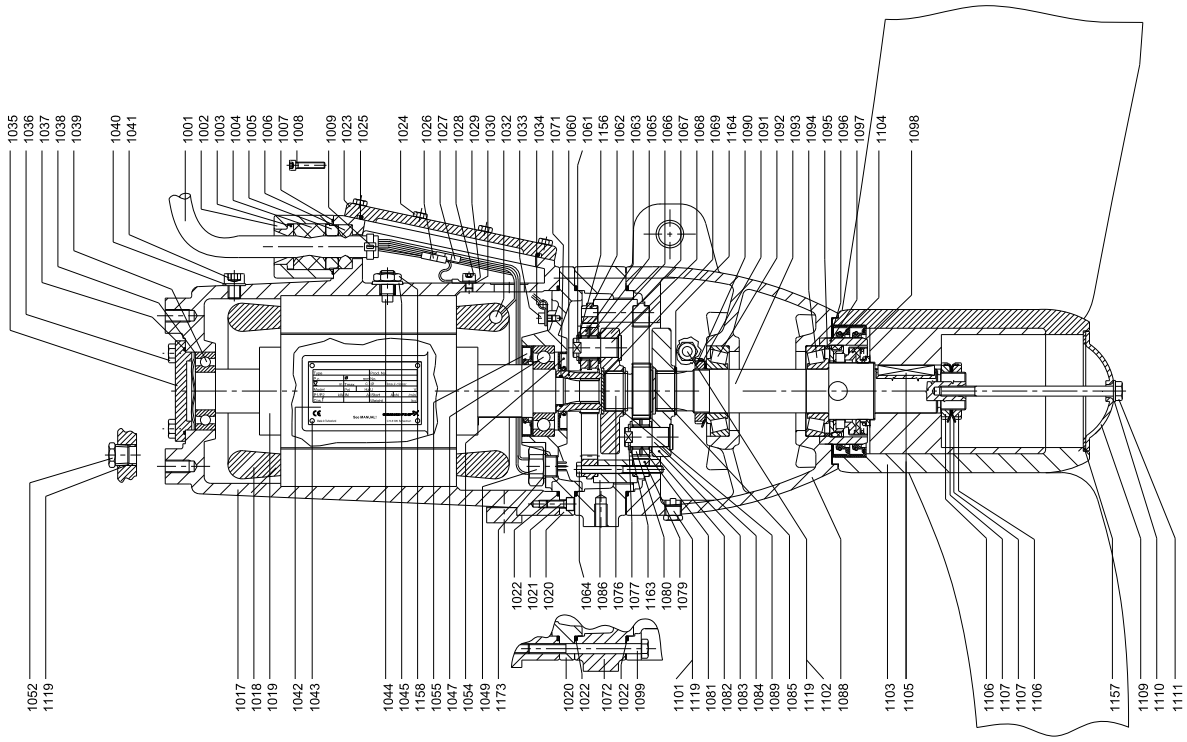

TM03 5480 3307

AFG.xx.130.xx.Ex (50 Hz only)

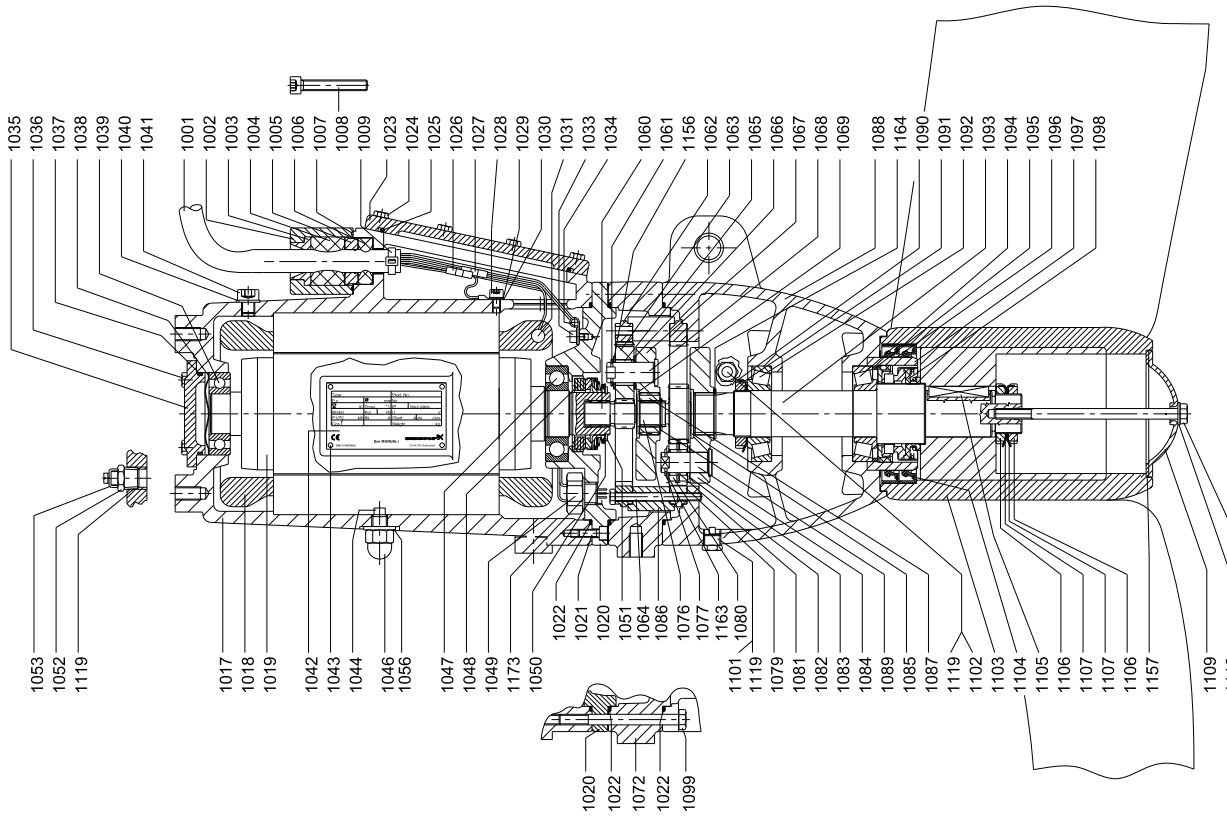

TM03 5492 3307

Motor

Pos.	Description		Non-Ex version		Ex version (50 Hz only)	
		50 Hz	AFG.08.130 AFG.11.130 AFG.15.130 AFG.22.130	AFG.30.130 AFG.40.130	AFG.15.130 AFG.22.130	AFG.30.130 AFG.40.130
		60 Hz SI	AFG.14.130 AFG.18.130	AFG.30.130 AFG.40.130	-	-
		60 Hz US	AFG.19.51 AFG.24.51	AFG.40.51 AFG.55.51	-	-
		Kit No	95038405	95038406	95038407	95038408
1002	Cable flange		1	1	1	1
1007	O-ring		1	1	1	1
1008	Hexagon socket head cap screw		2	2	2	2
1017	Motor housing		1	1	1	1
1018	Stator 4-pole		1	1	1	1
1019	Rotor with shaft 4-pole		1	1	1	1
1020	Motor flange		1	1	1	1
1021	Hexagon socket head cap screw		3	3	3	3
1022	O-ring		2	2	2	2
1023	Terminal box cover		1	1	1	1
1024	Hexagon head screw		8	8	8	8
1025	O-ring		1	1	1	1
1028	Hexagon socket head cap screw		1	1	1	1
1029	Lock washer		1	1	1	1
1033	Hexagon socket head cap screw		1	1	1	1
1034	Cable clamp		1	1	1	1
1035	Bearing cover		1	1	1	1
1036	Hexagon head screw		4	4	4	4
1037	O-ring		1	1	1	1
1038	Compensation disc		1	1	1	1
1039	Ball bearing		1	1	-	-
	Ball bearing		-	-	1	1
1040	Washer		1	1	1	1
1041	Hexagon socket head cap screw		1	1	1	1
1044	Set screw		1	1	1	1
1045	Spring washer		1	1	-	1
1046	Nut		-	-	1	1
1047	Ball bearing		1	1	-	-
	Ball bearing		-	-	1	1
1048	Mechanical shaft seal		-	-	1	1
1049	Water-in-oil sensor		1	1	1	1
1050	Shim		-	-	1	1
1051	Retaining ring		-	-	1	1
1052	Plug		1	1	1	1
1053	Connection for protective earthing		-	-	1	1
1054	Lip seal		1	1	-	-
1055	Lip seal		1	1	-	-
1056	Seal washer		-	-	1	1
1119	PTFE tape		1	1	1	1
1158	Nut		1	1	-	-
1173	Seal washer		1	1	1	1

AFG non-ATEX

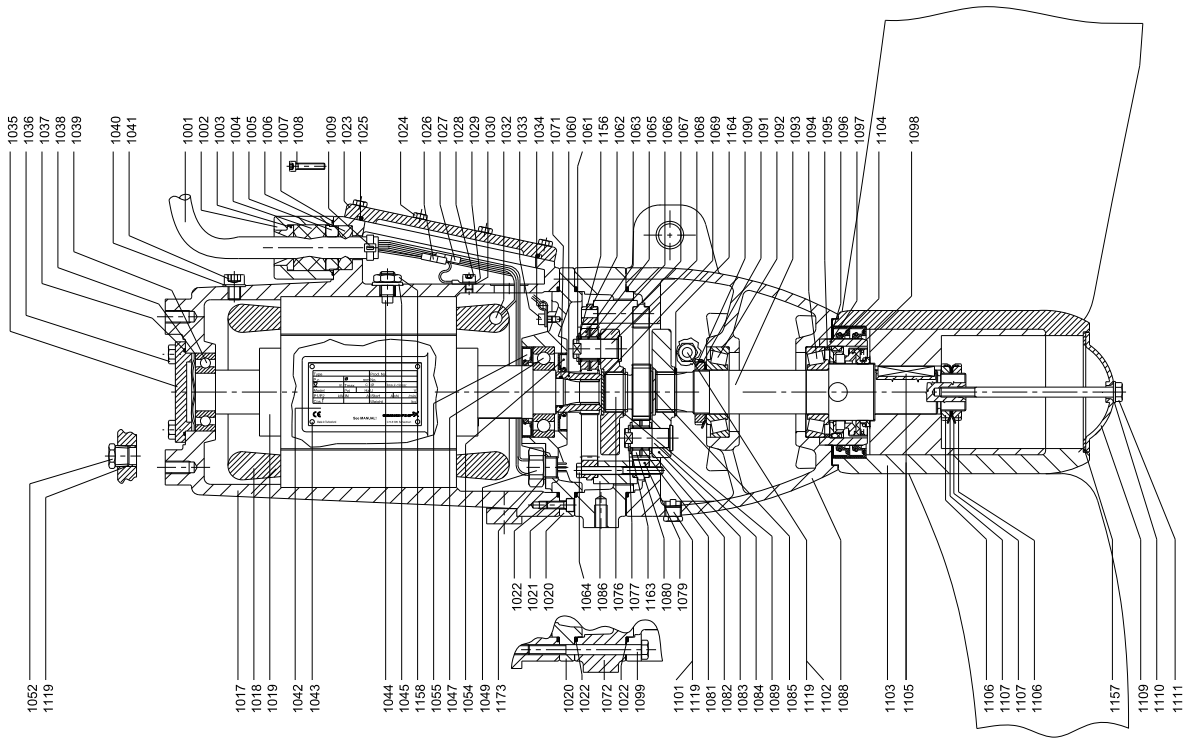

AFG.xx.130.xx.Ex (50 Hz only)

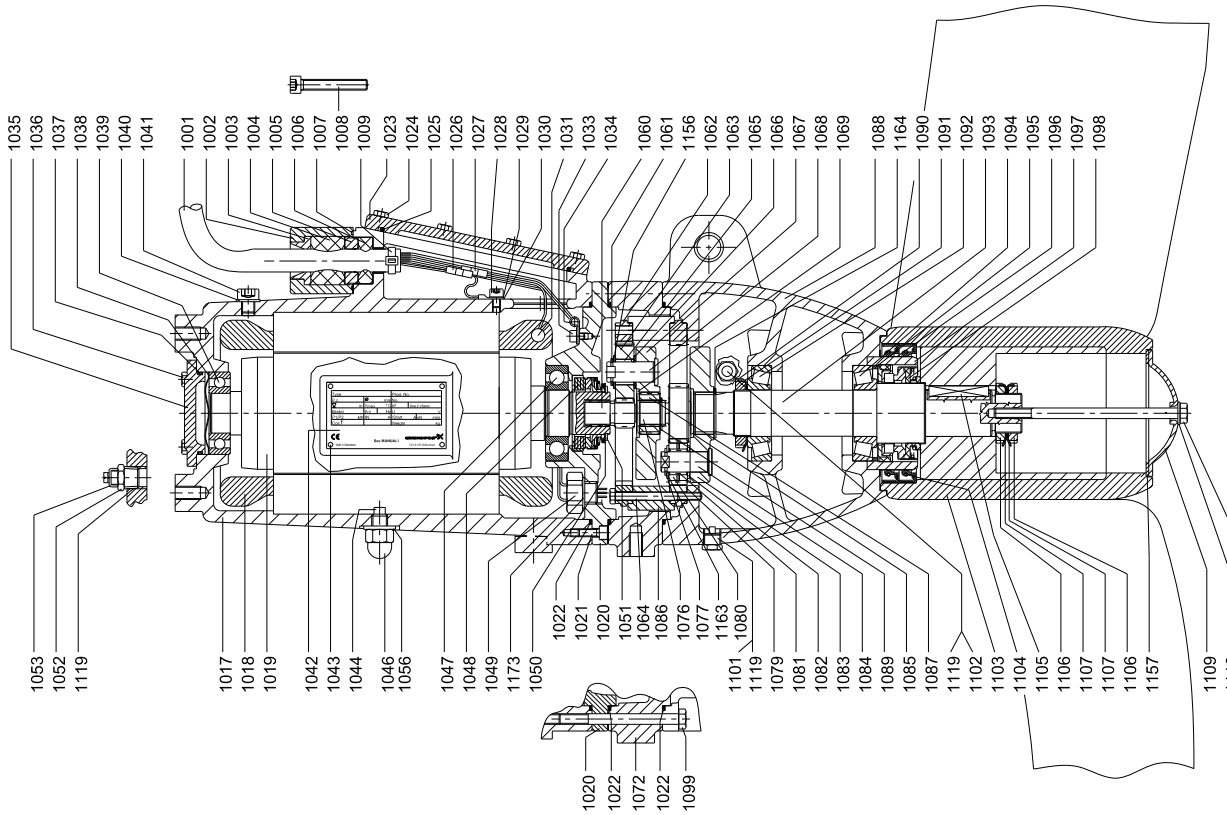

AFG.xx.180.xx (50/60 Hz) and AFG.xx.71.xx (60 Hz North America)

Bearing, motor

Pos.	Description/Kit No		95065458
1038	Compensation disc		1
1039	Ball bearing 6206 2RS		1
1047	Ball bearing 6207 2RS		1

Bearing, gearbox

Pos.	Description/Kit No		95065467
1090	Slotted nut; elastic stop		1
1092	Tapered roller bearing 30209		1
1094	Tapered roller bearing 32209		1

Cable entry, 1.5 mm²

Pos.	Description/Kit No		95065457
1003	Cable guide		1
1004	cable seal, large		1
1005	Thrust washer		1
1006	cable seal, small		1
1007	O-ring	37.82 x 1.78	1
1008	Hexagon socket head cap screw		2
1009	Cable relief		1
1025	O-ring	113.97 x 2.62	1
1026	Cable joint		6
1027	Cable joint		4
1030	Cable shoe		1
-	Shrink tube for connections		10

Gear housing

Pos.	Description/Kit No		95038481
1088	Gear housing		1
1089	Retaining ring		1
1090	Slotted nut; elastic stop		1
1092	Tapered roller bearing		1
1093	Gear shaft		1
1094	Tapered roller bearing		1
1101	Drain plug with magnet		1
1102	Plug		2
1119	PTFE tape		1

Gasket kit

Pos.	Description/Kit No		95065482
1004	cable seal, large		1
1006	cable seal, small		1
1007	O-ring	37.82 x 1.78	1
1022	O-ring	158.42 x 2.62	2
1025	O-ring	113.97 x 2.62	1
1037	O-ring	63.22 x 1.78	1
1054	Lip seal	62 x 32 x 8	1
1055	Lip seal	72 x 40 x 7	1
1071	O-ring	21.95 x 1.78	1
1073	O-ring	215.57 x 2.62	1
1157	Gasket	96 x 75 x 2	1

Gasket kit, Ex version (50 Hz only)

Pos.	Description/Kit No		95065483
1004	cable seal, large		1
1006	cable seal, small		1
1007	O-ring	37.82 x 1.78	1
1022	O-ring	158.42 x 2.62	2
1025	O-ring	113.97 x 2.62	1
1037	O-ring	56.82 x 2.62	1
1048	Mechanical shaft seal		1
1050	Shim		1
1051	Retaining ring		1
1073	O-ring	215.57 x 2.62	1
1157	Gasket	96 x 75 x 2	1

Radial seal

Pos.	Description/Kit No		95039131
1104	Lip seal	120 x 100 x 12	2
1108	O-ring	94.92 x 2.62	1
	O-ring	184.0 x 3.0	1
	O-ring	225.0 x 3.0	1
1110	Washer	∅10.5 / 20 x 2	1
1157	Gasket	96 x 75 x 2	1

Shaft seal

Pos.	Description/Kit No	95065470
1098	Mechanical shaft seal	1

Slotted nut

Pos.	Description/Kit No	95038489
1106	Slotted nut	2
1107	Lock washer	2

Water-in-oil sensor

Pos.	Description/Kit No	95038409
1049	Water-in-oil sensor	1
1173	Seal washer	1

Wear ring

Pos.	Description/Kit No		Standard 95037375
1097	Wear ring ceramic		1
1104	Lip seal	120 x 100 x 12	2
1108	O-ring	94.92 x 2.62	1
	O-ring	184.0 x 3.0	1
	O-ring	225.0 x 3.0	1
1157	Gasket	96 x 75 x 2	1

AFG non-ATEX

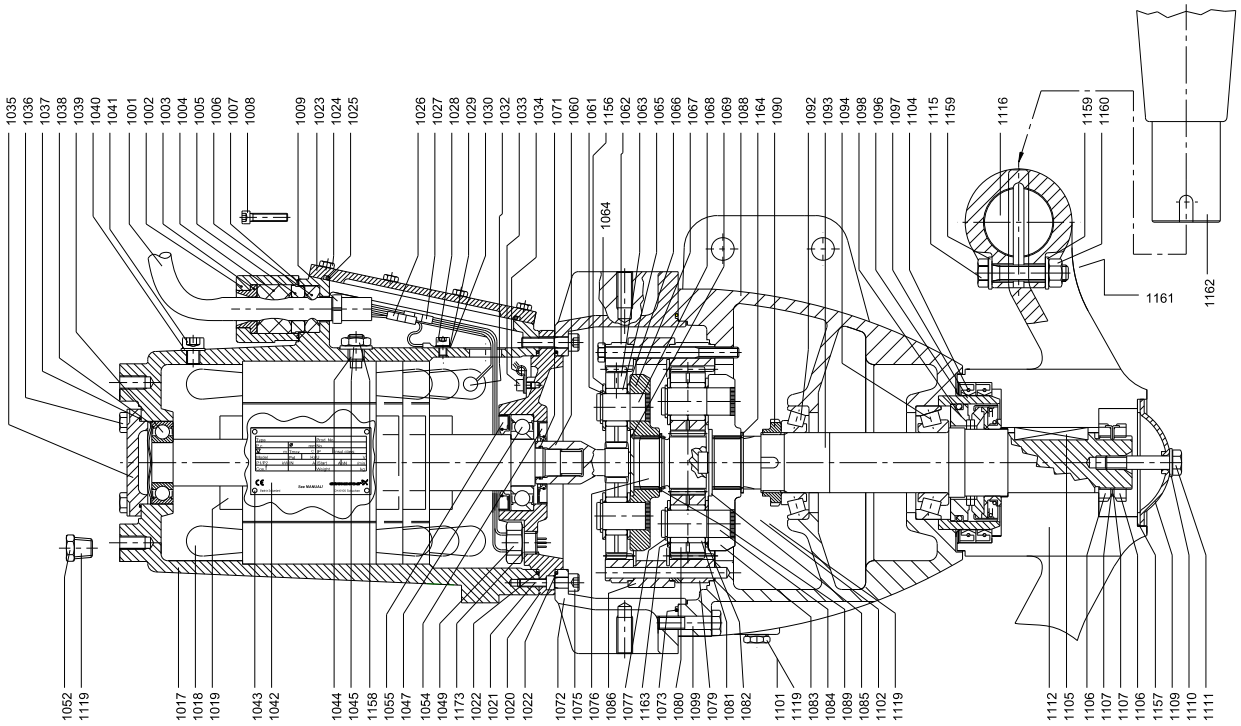

TM03 5482 3307

AFG.xx.180.xx.Ex (50 Hz only)

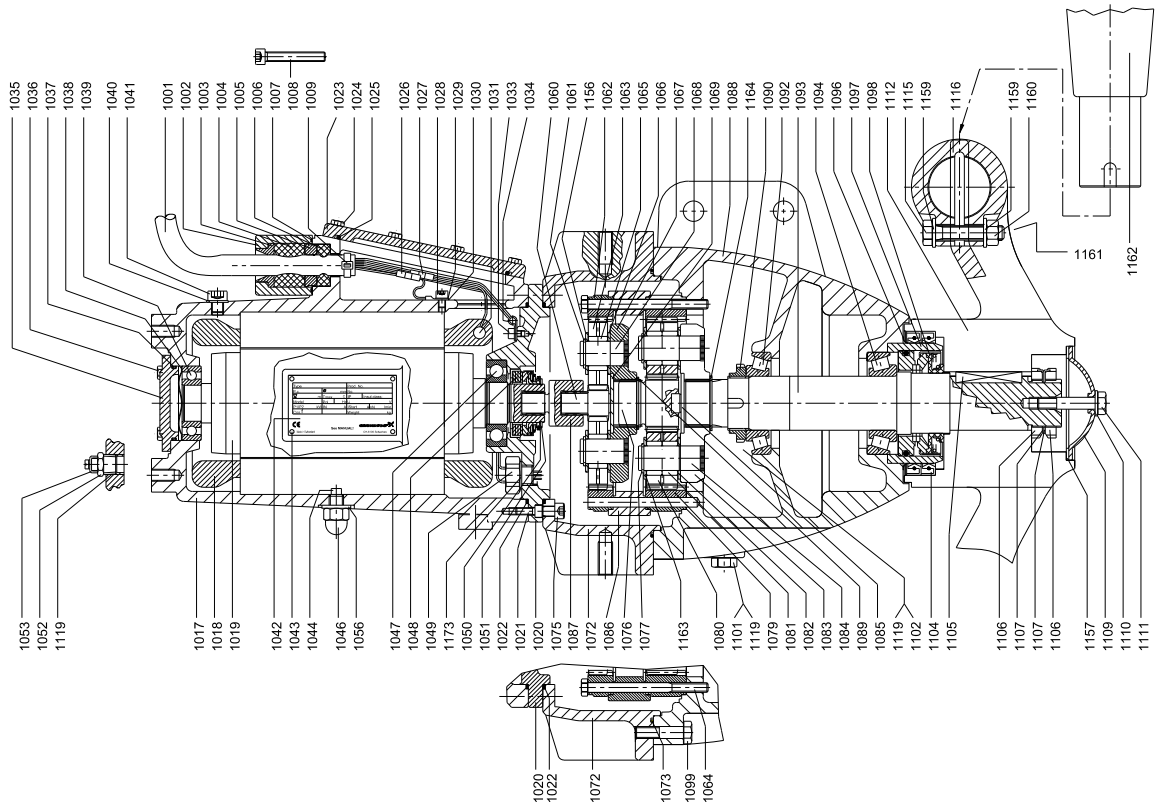

TM03 5494 3307

Cable

Pos.	Description/Kit No	95038410	95038411	95038412
1001	Cable	10 m / 30 ft	15 m / 50 ft	25 m / 80 ft
1026	Cable joint	6	6	6
1027	Cable joint	4	4	4
1030	Cable shoe	1	1	1

Gear

Pos.	Description		Step 1		Step 2				
		50 Hz	All Non-Ex versions	All Ex versions	AFG.13.180	-	AFG.18.180	AFG.24.180	AFG.37.180
		60 Hz SI			AFG.18.180	AFG.13.180	AFG.27.180	AFG.37.180	-
		60 Hz US			AFG.24.71	AFG.17.71	AFG.36.71	AFG.50.71	-
		Kit No	95038580	95038581	95038585	95038749	95038584	95038583	95038582
1060	Sun wheel		1	1	-	-	-	-	-
1061	Retaining ring		3	3	-	-	-	-	-
1062	Ring gear		1	1	-	-	-	-	-
1063	Planet gear		3	3	-	-	-	-	-
1065	Roller		57	57	-	-	-	-	-
1066	Washer		3	3	-	-	-	-	-
1067	Planet carrier		1	1	-	-	-	-	-
1068	Planet pin		3	3	-	-	-	-	-
1069	Cover		1	1	-	-	-	-	-
1071	O-ring		1	-	-	-	-	-	-
1076	Sun wheel i = 5.6		-	-	1	-	-	-	-
	Sun wheel i = 4.83		-	-	-	-	1	-	-
	Sun wheel i = 4.28		-	-	-	-	-	1	-
	Sun wheel i = 3.55		-	-	-	-	-	-	1
	Sun wheel i = 6.75		-	-	-	1	-	-	-
1077	Retaining ring A 20		-	-	3	3	3	3	3
1079	Ring gear Z=69		-	-	1	1	1	1	1
1080	Planet gear i = 5.6		-	-	3	-	-	-	-
	Planet gear i = 4.83		-	-	-	-	3	-	-
	Planet gear i = 4.28		-	-	-	-	-	3	-
	Planet gear i = 3.55		-	-	-	-	-	-	3
	Planet gear i = 6.75		-	-	-	3	-	-	-
1081	Roller		-	-	114	114	114	114	114
1082	Washer 2 mm		-	-	3	3	3	3	3
1083	Planet carrier i = 5.6		-	-	1	-	-	-	-
	Planet carrier i = 4.83		-	-	-	-	1	-	-
	Planet carrier i = 4.28		-	-	-	-	-	1	-
	Planet carrier i = 3.55		-	-	-	-	-	-	1
	Planet carrier i = 6.75		-	-	-	1	-	-	-
1084	Planet pin		-	-	3	3	3	3	3
1085	Cover		-	-	1	1	1	1	1
1087	Gear coupling		-	1	-	-	-	-	-
1089	Retaining ring		-	-	1	1	1	1	1
1156	Washer		3	3	-	-	-	-	-
1163	Washer 2 mm		-	-	3	3	3	3	3

Propeller

Pos.	Description/Kit No	95038558
1104	Lip seal	2
1105	Parallel key	1
1106	Slotted nut	2
1109	Hub cover	1
1110	Washer	1
1111	Hexagon head screw	1
1112	Hub (2 blades)	1
1115	Hexagon head screw	4
1116	Grooved pin	2
1157	Gasket	1
1159	Washer	8
1160	Nut	4
1161	Hexagon head screw	2
1162	Propeller blade type III / 95	2

AFG non-ATEX

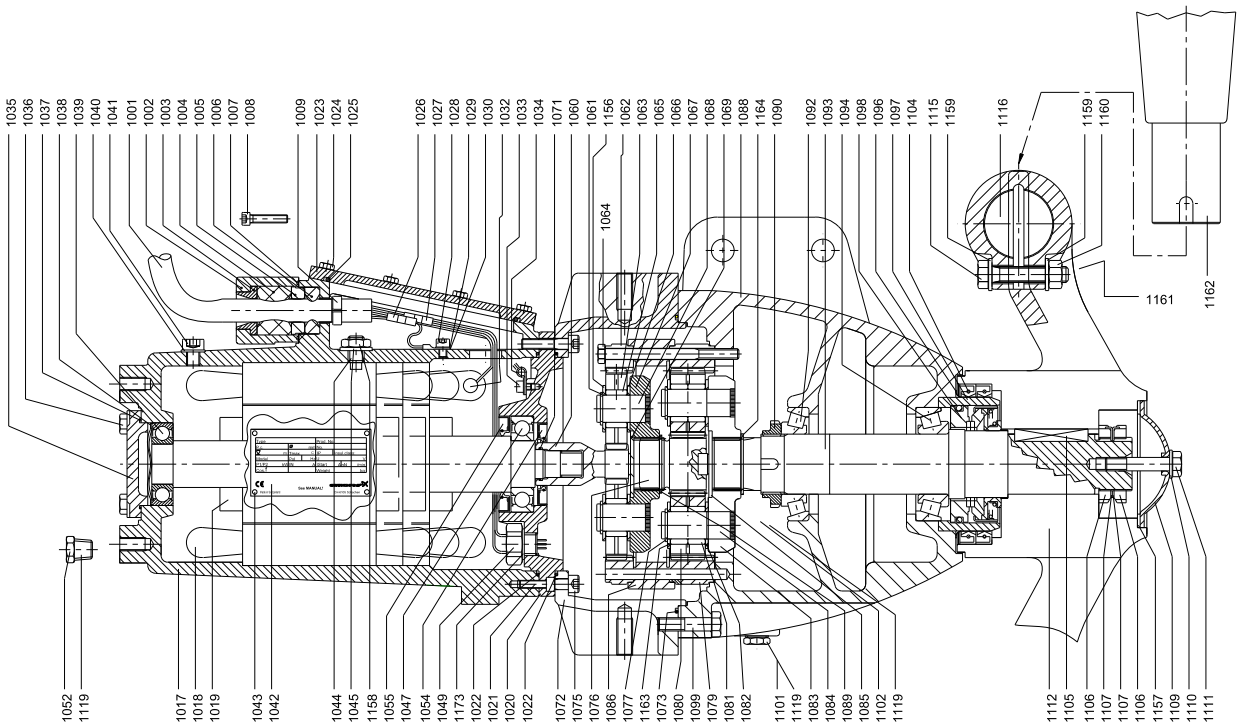

TM03 5482 3307

AFG.xx.180.xx.Ex (50 Hz only)

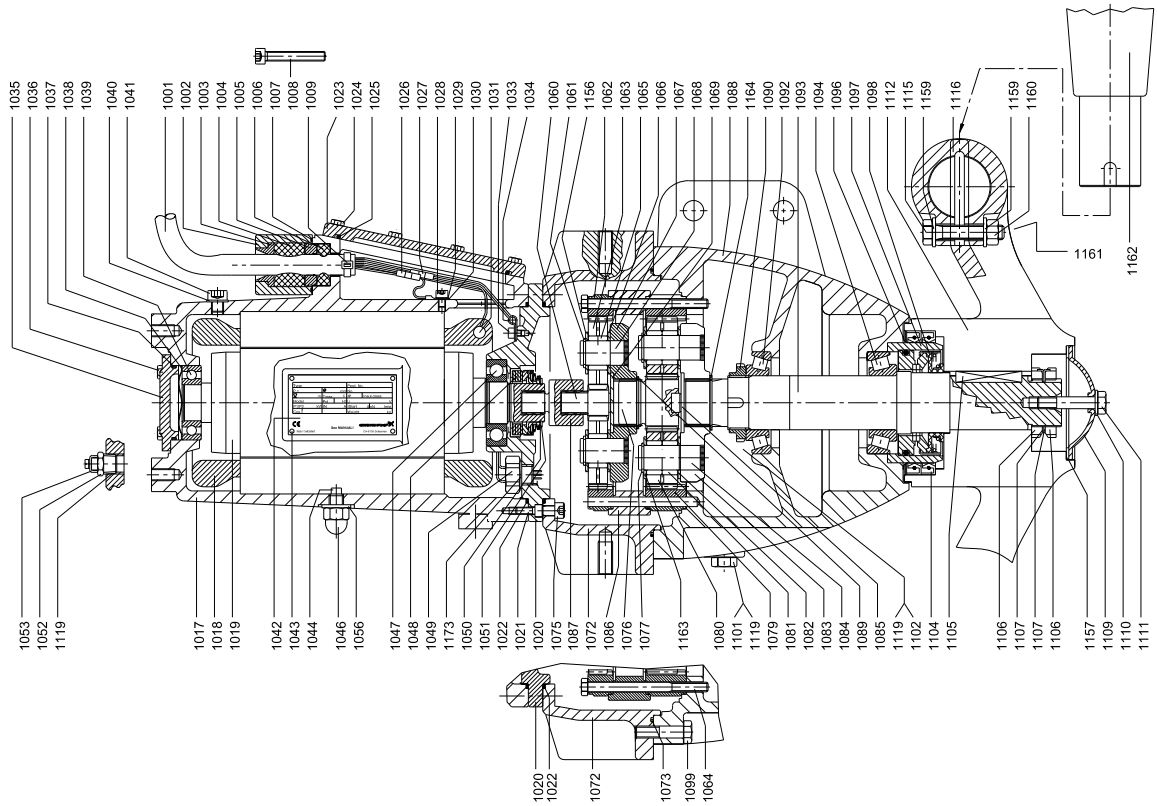

TM03 5494 3307

Motor

Pos.	Description		Non-Ex version		Ex version (50 Hz only)	
		50 Hz	AFG.13.180 AFG.18.180	AFG.24.180 AFG.37.180	AFG.13.180 AFG.18.180	AFG.24.180 AFG.37.180
		60 Hz SI	AFG.13.180 AFG.18.180	AFG.27.180 AFG.37.180	-	-
		60 Hz US	AFG.17.71 AFG.24.71	AFG.36.71 AFG.50.71	-	-
		Kit No	95038405	95038406	95038407	95038408
1002	Cable flange		1	1	1	1
1007	O-ring		1	1	1	1
1008	Hexagon socket head cap screw		2	2	2	2
1017	Motor housing		1	1	1	1
1018	Stator 4-pole		1	1	1	1
1019	Rotor with shaft 4-pole		1	1	1	1
1020	Motor flange		1	1	1	1
1021	Hexagon socket head cap screw		3	3	3	3
1022	O-ring		2	2	2	2
1023	Terminal box cover		1	1	1	1
1024	Hexagon head screw		8	8	8	8
1025	O-ring		1	1	1	1
1028	Hexagon socket head cap screw		1	1	1	1
1029	Lock washer		1	1	1	1
1033	Hexagon socket head cap screw		1	1	1	1
1034	Cable clamp		1	1	1	1
1035	Bearing cover		1	1	1	1
1036	Hexagon head screw		4	4	4	4
1037	O-ring		1	1	1	1
1038	Compensation disc		1	1	1	1
1039	Ball bearing		1	1	-	-
	Ball bearing		-	-	1	1
1040	Washer		1	1	1	1
1041	Hexagon socket head cap screw		1	1	1	1
1044	Set screw		1	1	1	1
1045	Spring washer		1	1	-	-
1046	Nut		-	-	1	1
1047	Ball bearing		1	1	-	-
	Ball bearing		-	-	1	1
1048	Mechanical shaft seal		-	-	1	1
1049	Water-in-oil sensor		1	1	1	1
1050	Shim		-	-	1	1
1051	Retaining ring		-	-	1	1
1052	Plug		1	1	1	1
1053	Connection for protective earthing		-	-	1	1
1054	Lip seal		1	1	-	-
1055	Lip seal		1	1	-	-
1056	Seal washer		-	-	1	1
1119	PTFE tape		1	1	1	1
1158	Nut		1	1	-	-
1173	Seal washer		1	1	1	1

AFG non-ATEX

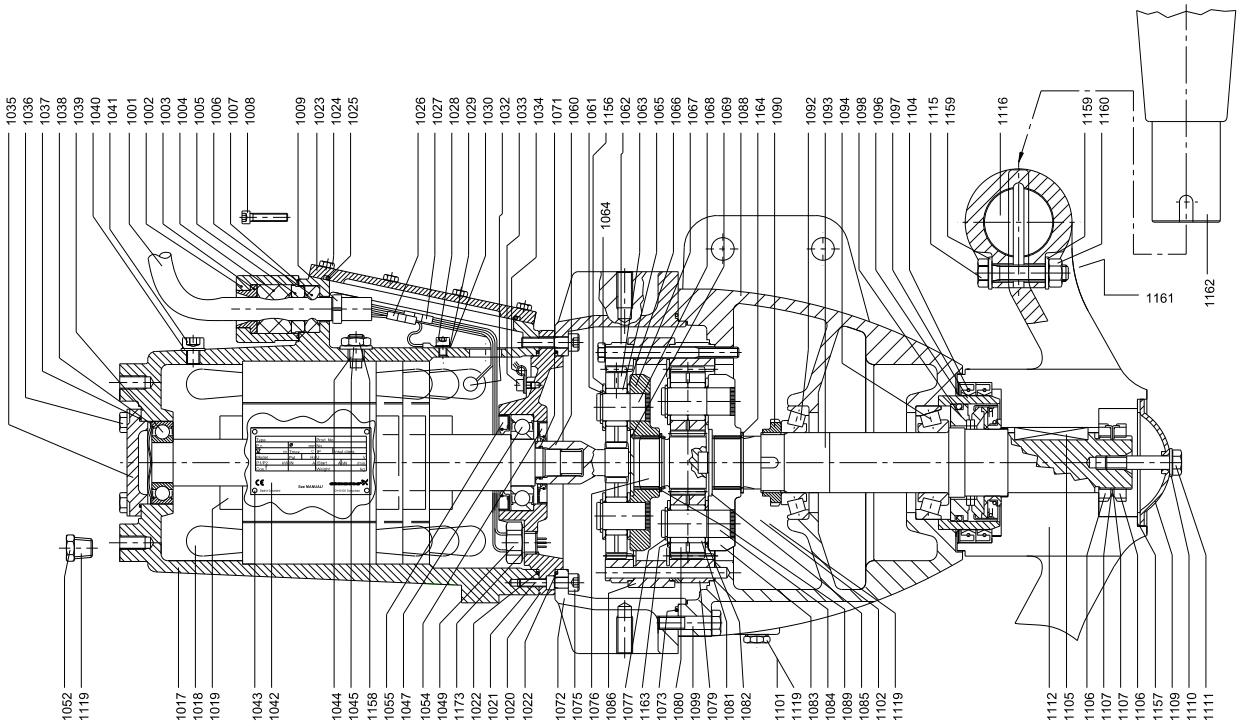

TM03 5482 3307

AFG.xx.180.xx.Ex (50 Hz only)

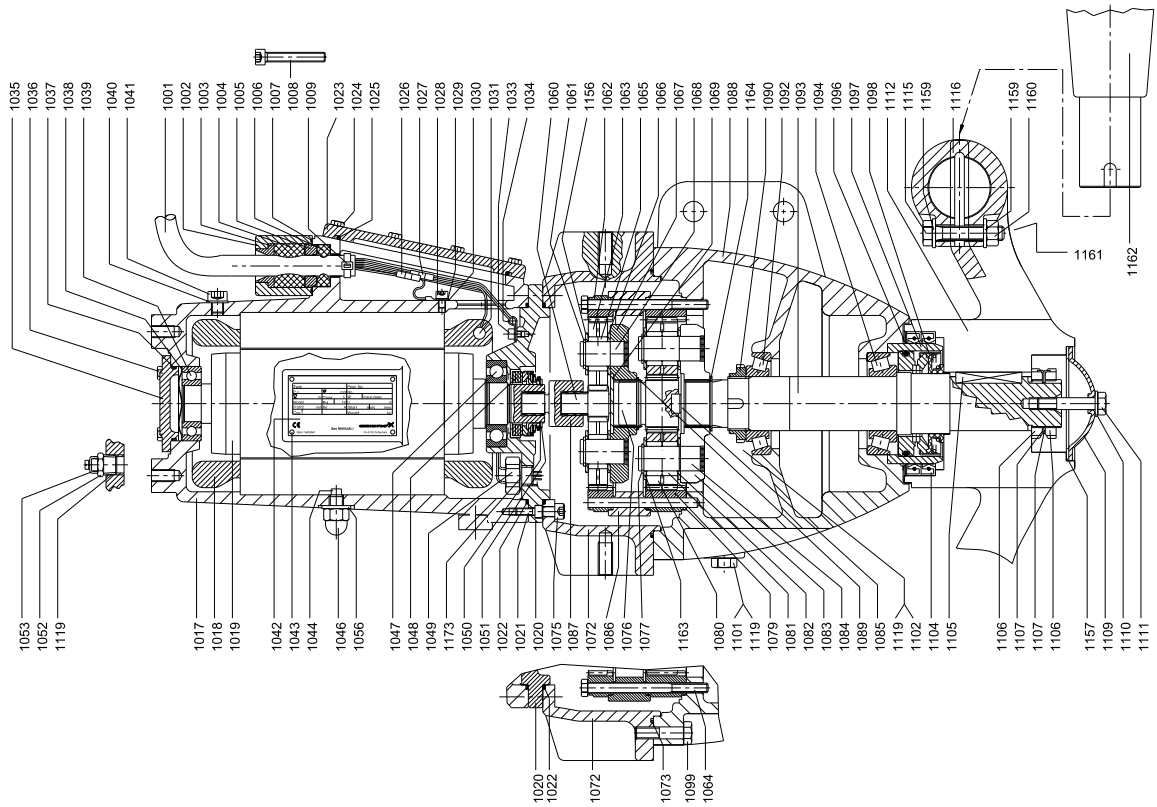

TM03 5494 3307

AFG.xx.230.xx (50/60 Hz) and AFG.xx.91.xx (60 Hz North America)

Bearing, motor

Pos.	Description/Kit No	95065458
1038	Compensation disc	1
1039	Ball bearing 6206 2RS	1
1047	Ball bearing 6207 2RS	1

Bearing, gearbox

Pos.	Description/Kit No	95065467
1090	Slotted nut; elastic stop	1
1092	Tapered roller bearing 30209	1
1094	Tapered roller bearing 32209	1

Cable entry, 1.5 mm^2

Pos.	Description/Kit No		95065457
1003	Cable guide		1
1004	cable seal, large		1
1005	Thrust washer		1
1006	cable seal, small		1
1007	O-ring	37.82 x 1.78	1
1008	Hexagon socket head cap screw		2
1009	Cable relief		1
1025	O-ring	113.97 x 2.62	1
1026	Cable joint		6
1027	Cable joint		4
1030	Cable shoe		1
-	Shrink tube for connections		10

Cable

Pos.	Description/Kit No	95038410	95038411	95038412
1001	Cable	10 m/30 ft	15 m/50 ft	25 m/80 ft
1026	Cable joint	6	6	6
1027	Cable joint	4	4	4
1030	Cable shoe	1	1	1

Gear housing

Pos.	Description/Kit No	95038481
1088	Gear housing	1
1090	Slotted nut; elastic stop	1
1092	Tapered roller bearing	1
1093	Gear shaft	1
1094	Tapered roller bearing	1
1101	Drain plug with magnet	1
1102	Plug	2
1119	PTFE tape	1
1164	Retaining ring A 40	1

Gasket kit

Pos.	Description/Kit No		95065482
1004	cable seal, large		1
1006	cable seal, small		1
1007	O-ring	37.82 x 1.78	1
1022	O-ring	158.42 x 2.62	2
1025	O-ring	113.97 x 2.62	1
1037	O-ring	63.22 x 1.78	1
1054	Lip seal	62 x 32 x 8	1
1055	Lip seal	72 x 40 x 7	1
1071	O-ring	21.95 x 1.78	1
1073	O-ring	215.57 x 2.62	1
1157	Gasket	96 x 75 x 2	1

Gasket kit, Ex version (50 Hz only)

Pos.	Description/Kit No		95065483
1004	cable seal, large		1
1006	cable seal, small		1
1007	O-ring	37.82 x 1.78	1
1022	O-ring	158.42 x 2.62	2
1025	O-ring	113.97 x 2.62	1
1037	O-ring	56.82 x 2.62	1
1048	Mechanical shaft seal		1
1050	Shim		1
1051	Retaining ring		1
1073	O-ring	215.57 x 2.62	1
1157	Gasket	96 x 75 x 2	1

Radial seal

Pos.	Description/Kit No		95039131
1104	Lip seal	120 x 100 x 12	2
1108	O-ring	94.92 x 2.62	1
	O-ring	184.0 x 3.0	1
	O-ring	225.0 x 3.0	1
1110	Washer	∅10.5 / 20 x 2	1
1157	Gasket	96 x 75 x 2	1

Shaft seal

Pos.	Description/Kit No	95065470
1098	Mechanical shaft seal	1

Slotted nut

Pos.	Description/Kit No	95038489
1106	Slotted nut	2
1107	Lock washer	2

Water-in-oil sensor

Pos.	Description/Kit No	95038409
1049	Water-in-oil sensor	1
1173	Seal washer	1

Wear ring

Pos.	Description/Kit No		Standard 95037375
1097	Wear ring ceramic		1
1104	Lip seal	120 x 100 x 12	2
1108	O-ring	94.92 x 2.62	1
	O-ring	184.0 x 3.0	1
	O-ring	225.0 x 3.0	1
1157	Gasket	96 x 75 x 2	1

AFG non-ATEX

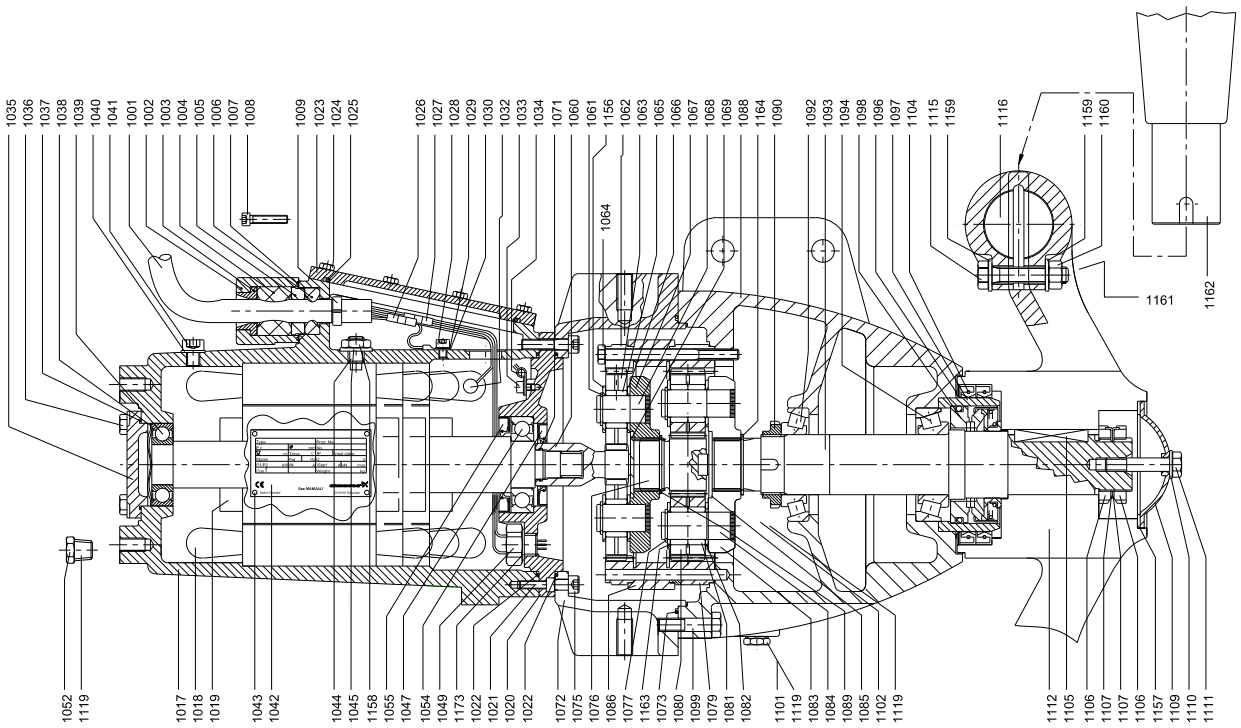

TM03 5482 3307

AFG.xx.230.xx.Ex (50 Hz only)

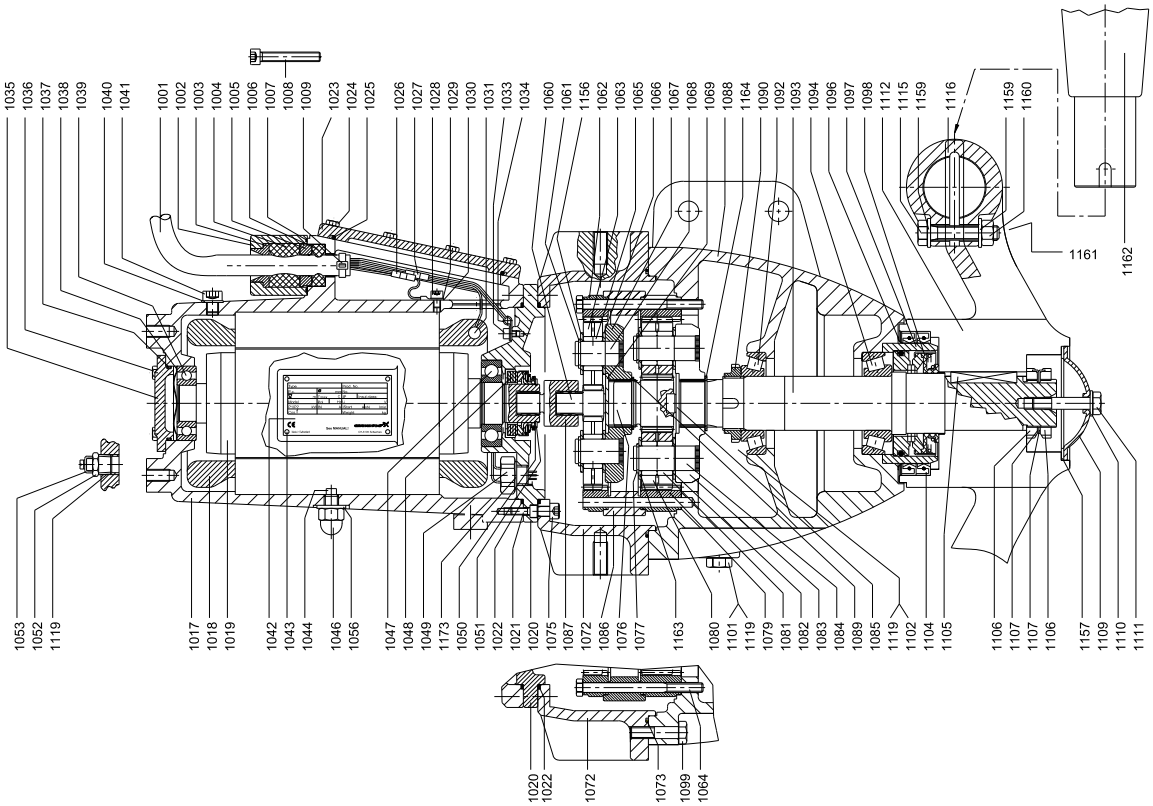

TM03 5494 3307

Gear

Pos.	Description		Step 1		Step 2			
		50 Hz	All Non-Ex version	All Ex version	AFG.30.230	-	AFG.15.230 AFG.40.230	AFG.22.230
		60 Hz SI			AFG.15.230 AFG.40.230	AFG.30.230	AFG.22.230	-
		60 Hz US			AFG.20.91 AFG.55.91	AFG.40.91	AFG.30.91	-
		Kit No	95038580	95038581	95038585	95038749	95038584	95038583
1060	Sun wheel		1	1	-	-	-	-
1061	Retaining ring		3	3	-	-	-	-
1062	Ring gear		1	1	-	-	-	-
1063	Planet gear		3	3	-	-	-	-
1065	Roller		57	57	-	-	-	-
1066	Washer		3	3	-	-	-	-
1067	Planet carrier		1	1	-	-	-	-
1068	Planet pin		3	3	-	-	-	-
1069	Cover		1	1	-	-	-	-
1071	O-ring		1	-	-	-	-	-
1076	Sun wheel i = 5.6		-	-	1	-	-	-
	Sun wheel i = 4.83		-	-	-	-	1	-
	Sun wheel i = 4.28		-	-	-	-	-	1
	Sun wheel i = 6.75		-	-	-	1	-	-
1077	Retaining ring		-	-	3	3	3	3
1079	Ring gear		-	-	1	1	1	1
1080	Planet gear i = 5.6		-	-	3	-	-	-
	Planet gear i = 4.83		-	-	-	-	3	-
	Planet gear i = 4.28		-	-	-	-	-	3
	Planet gear i = 6.75		-	-	-	3	-	-
1081	Roller		-	-	114	114	114	114
1082	Washer		-	-	3	3	3	3
1083	Planet carrier i = 5.6		-	-	1	-	-	-
	Planet carrier i = 4.83		-	-	-	-	1	-
	Planet carrier i = 4.28		-	-	-	-	-	1
	Planet carrier i = 6.75		-	-	-	1	-	-
1084	Planet pin		-	-	3	3	3	3
1085	Cover		-	-	1	1	1	1
1087	Gear coupling		-	1	-	-	-	-
1089	Retaining ring		-		1	1	1	1
1156	Washer		3	3	-	-	-	-
1163	Washer		-	-	3	3	3	3

Propeller

Pos.	Description			
		50 Hz	AFG.15.230 AFG.22.230	AFG.30.230 AFG.40.230
		60 Hz SI	AFG.15.230 AFG.22.230	AFG.30.230 AFG.40.230
		60 Hz US	AFG.20.91 AFG.30.91	AFG.40.91 AFG.55.91
		No of blades	2 blades	3 blades
		Kit No	95038559	95038560
1104	Lip seal		2	2
1105	Parallel key		1	1
1106	Slotted nut		2	2
1109	Hub cover		1	1
1110	Washer		1	1
1111	Hexagon head screw		1	1
1112	Hub		1	1
1115	Hexagon head screw		4	6
1116	Grooved pin		2	-
			-	3
1157	Gasket		1	1
1159	Washer		8	12
1160	Nut		4	6
1161	Hexagon head screw		2	3
1162	Propeller blade type III / 95		2	3

AFG non-ATEX

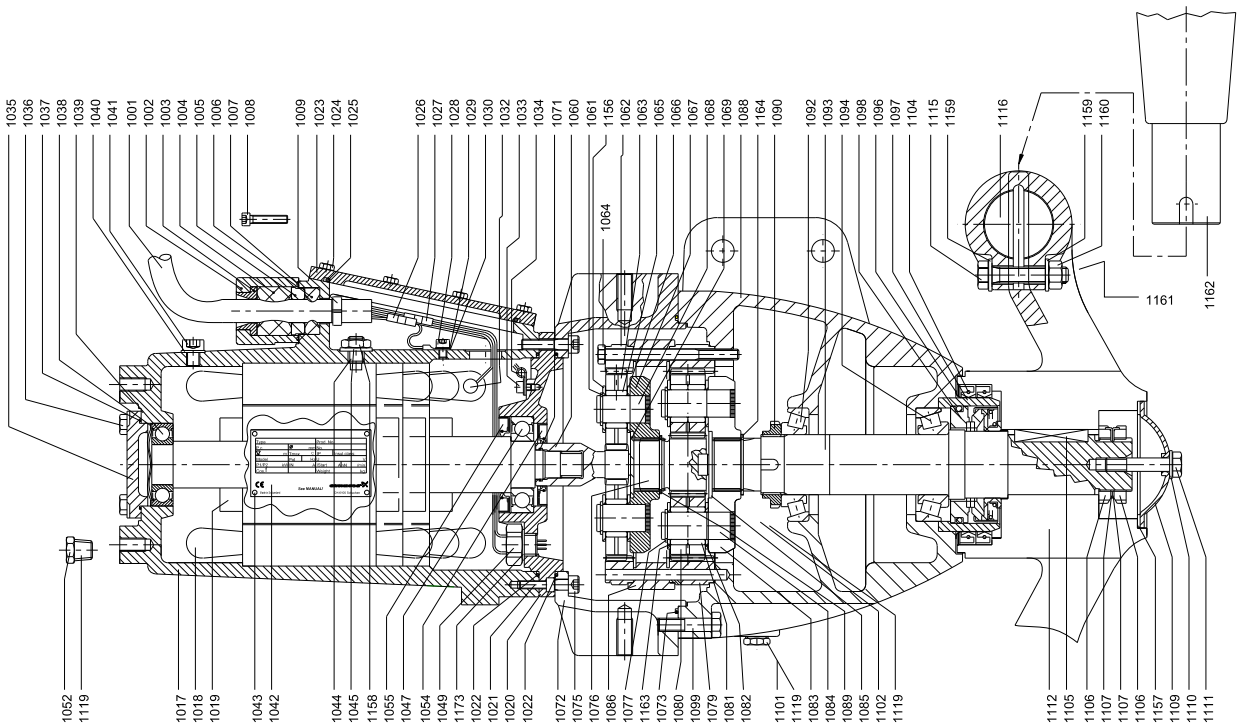

TM03 5482 3307

AFG.xx.230.xx.Ex (50 Hz only)

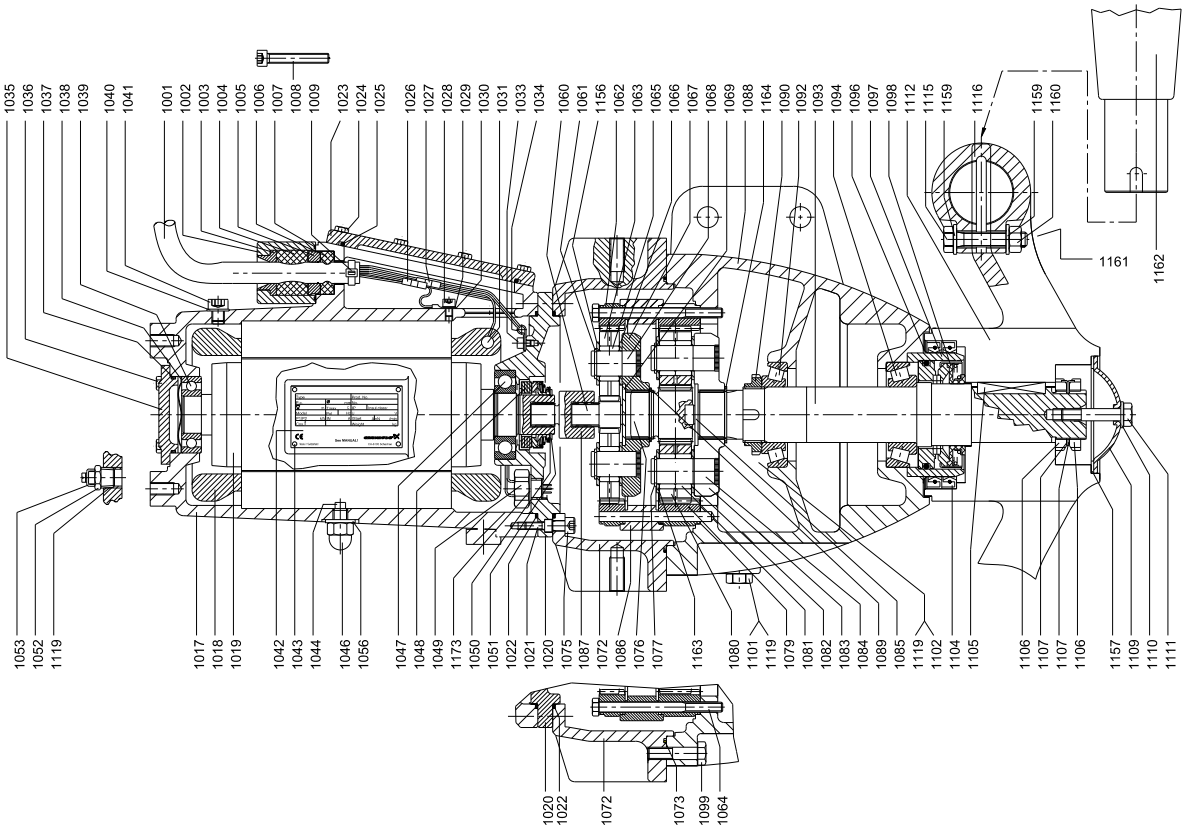

TM03 5494 3307

Motor

Pos.	Description		Non-Ex version		Ex version (50 Hz only)	
		50 Hz	AFG.15.230 AFG.22.230	AFG.30.230 AFG.40.230	AFG.15.230 AFG.22.230	AFG.30.230 AFG.40.230
		60 Hz SI	AFG.15.230 AFG.22.230	AFG.30.230 AFG.40.230	-	-
		60 Hz US	AFG.20.91 AFG.30.91	AFG.40.91 AFG.55.91	-	-
		Kit No	95038561	95038406	95038562	95038408
1002	Cable flange		1	1	1	1
1007	O-ring		1	1	1	1
1008	Hexagon socket head cap screw		2	2	2	2
1017	Motor housing		1	1	1	1
1018	Stator		1	1	1	1
1019	Rotor with shaft		1	1	1	1
1020	Motor flange		1	1	1	1
1021	Hexagon socket head cap screw		3	3	3	3
1022	O-ring		2	2	2	2
1023	Terminal box cover		1	1	1	1
1024	Hexagon head screw		8	8	8	8
1025	O-ring		1	1	1	1
1028	Hexagon socket head cap screw		1	1	1	1
1029	Lock washer		1	1	1	1
1033	Hexagon socket head cap screw		1	1	1	1
1034	Cable clamp		1	1	1	1
1035	Bearing cover		1	1	1	1
1036	Hexagon head screw		4	4	4	4
1037	O-ring		1	1	1	1
1038	Compensation disc		1	1	1	1
1039	Ball bearing		1	1	-	-
	Ball bearing		-	-	1	1
1040	Washer		1	1	1	1
1041	Hexagon socket head cap screw		1	1	1	1
1044	Set screw		1	1	1	1
1045	Spring washer		1	1	-	-
1046	Nut		-	-	1	1
1047	Ball bearing		1	1	-	-
	Ball bearing		-	-	1	1
1048	Mechanical shaft seal		-	-	1	1
1049	Water-in-oil sensor		1	1	1	1
1050	Shim		-	-	1	1
1051	Retaining ring		-	-	1	1
1052	Plug		1	1	1	1
1053	Connection for protective earthing		-	-	1	1
1054	Lip seal		1	1	-	-
1055	Lip seal		1	1	-	-
1056	Seal washer		-	-	1	1
1119	PTFE tape		1	1	1	1
1158	Nut		1	1	-	-
1173	Seal washer		1	1	1	1

AFG non-ATEX

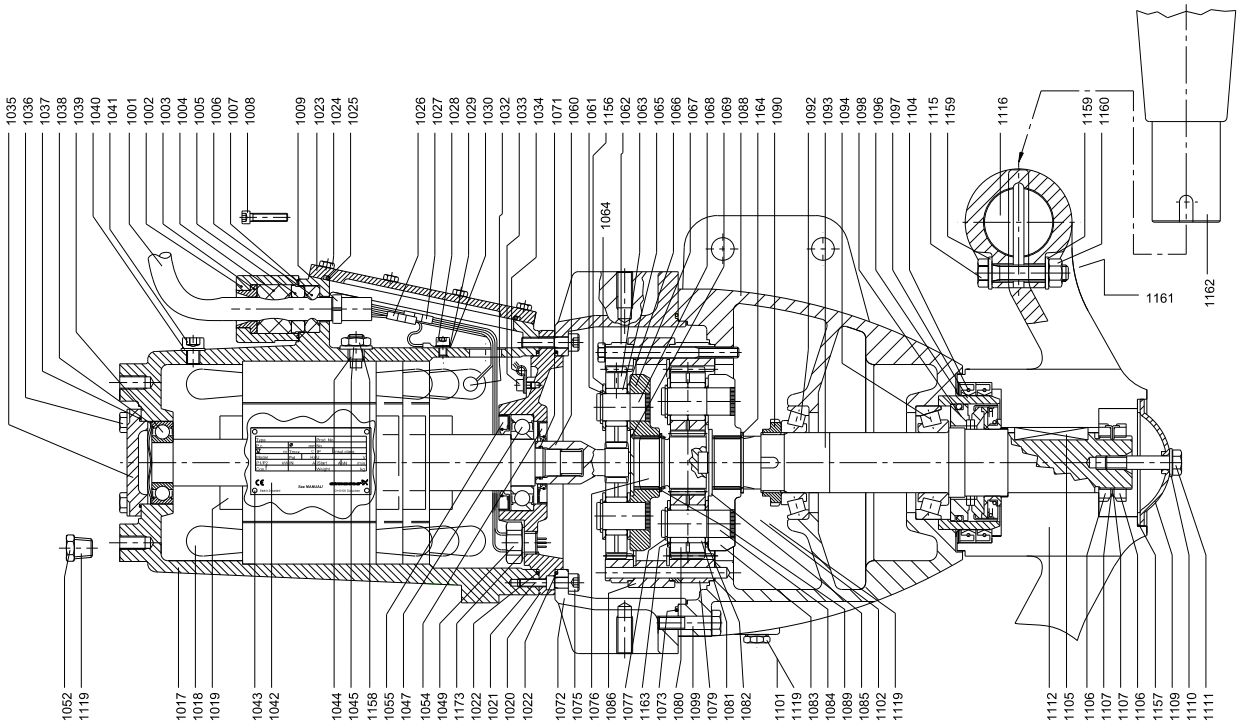

TM03 5482 3307

AFG.xx.230.xx.Ex (50 Hz only)

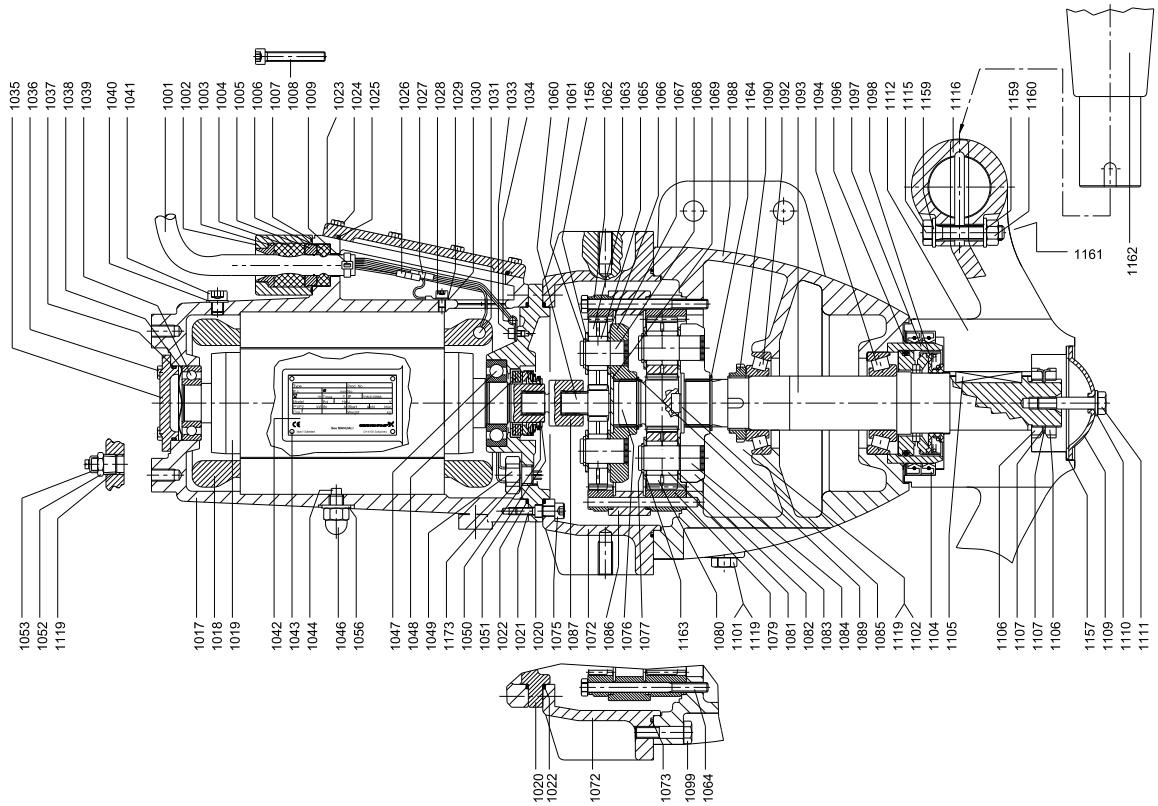

TM03 5494 3307

AFG.xx.260 (50/60 Hz) and AFG.xx.102 (60 Hz North America)

Bearing, motor

Pos.	Description/Kit No	96645955
1038	Compensation disc	1
1039	Ball bearing 6208 2RS	1
1047	Ball bearing 6010 2RS	1

Bearing, gearbox

Pos.	Description/Kit No	95065475
1090	Slotted nut	1
1091	Lock washer	1
1092	Tapered roller bearing 30212	1
1094	Tapered roller bearing 33212	1

Cable

Pos.	Description/Kit No	95038486	95038487	95038488
1001	Cable	10 m/30 ft	15 m/50 ft	25 m/80 ft
1026	Cable joint	6	6	6
1027	Cable joint	4	4	4
1030	Cable shoe	1	1	1

Cable entry, 2.5 mm^2

Pos.	Description/Kit No		95065465
1003	Cable guide		1
1004	cable seal, large		1
1005	Thrust washer		1
1006	cable seal, small		1
1007	O-ring	54.0 x 3.0	1
1008	Hexagon socket head cap screw		2
1009	Cable relief		1
1025	O-ring	139.29 x 3.53	1
1026	Cable joint		6
1027	Cable joint		4
1030	Cable shoe		1
-	Shrink tube for connections		10

Gear housing

Pos.	Description/Kit No	95038588
1088	Gear housing	1
1090	Slotted nut	1
1091	Lock washer	1
1092	Tapered roller bearing	1
1093	Gear shaft	1
1094	Tapered roller bearing	1
1101	Drain plug with magnet	1
1102	Plug	2
1119	PTFE tape	1

Gasket kit

Pos.	Description/Kit No		95035812
1004	cable seal, large		1
1006	cable seal, small		1
1007	O-ring	54.0 x 3.0	1
1022	O-ring	215.57 x 2.62	2
1025	O-ring	139.29 x 3.53	1
1037	O-ring	75.87 x 2.62	1
1048	Mechanical shaft seal		1
1050	Shim	63 x 50 x 0.5	1
1051	Retaining ring		1
1073	O-ring	260.0 x 3.5	1
1108	O-ring	94.92 x 2.62	1

Radial seal

Pos.	Description/Kit No		95039132
1104	Lip seal	150 x 125 x 12	2
1108	O-ring	120.2 x 3.53	1
	O-ring	225.0 x 3.0	1
	O-ring	94.92 x 2.62	1
1110	Washer	∅13 / 24 x 2.5	1

Shaft seal

Pos.	Description/Kit No	95065478
1095	Intermediate ring	1
1098	Mechanical shaft seal	1

Slotted nut

Pos.	Description	95038489
1106	Description/Kit No	2
1107	Lock washer	2

Water-in-oil sensor

Pos.	Description/Kit No	95038409
1049	Water-in-oil sensor	1
1173	Seal washer	1

Wear ring

Pos.	Description/Kit No		Standard 95037376
1097	Wear ring ceramic		1
1104	Lip seal	150 x 125 x 12	2
1108	O-ring	120.2 x 3.53	1
	O-ring	225.0 x 3.0	1
	O-ring	94.92 x 2.62	1

AFG non-ATEX

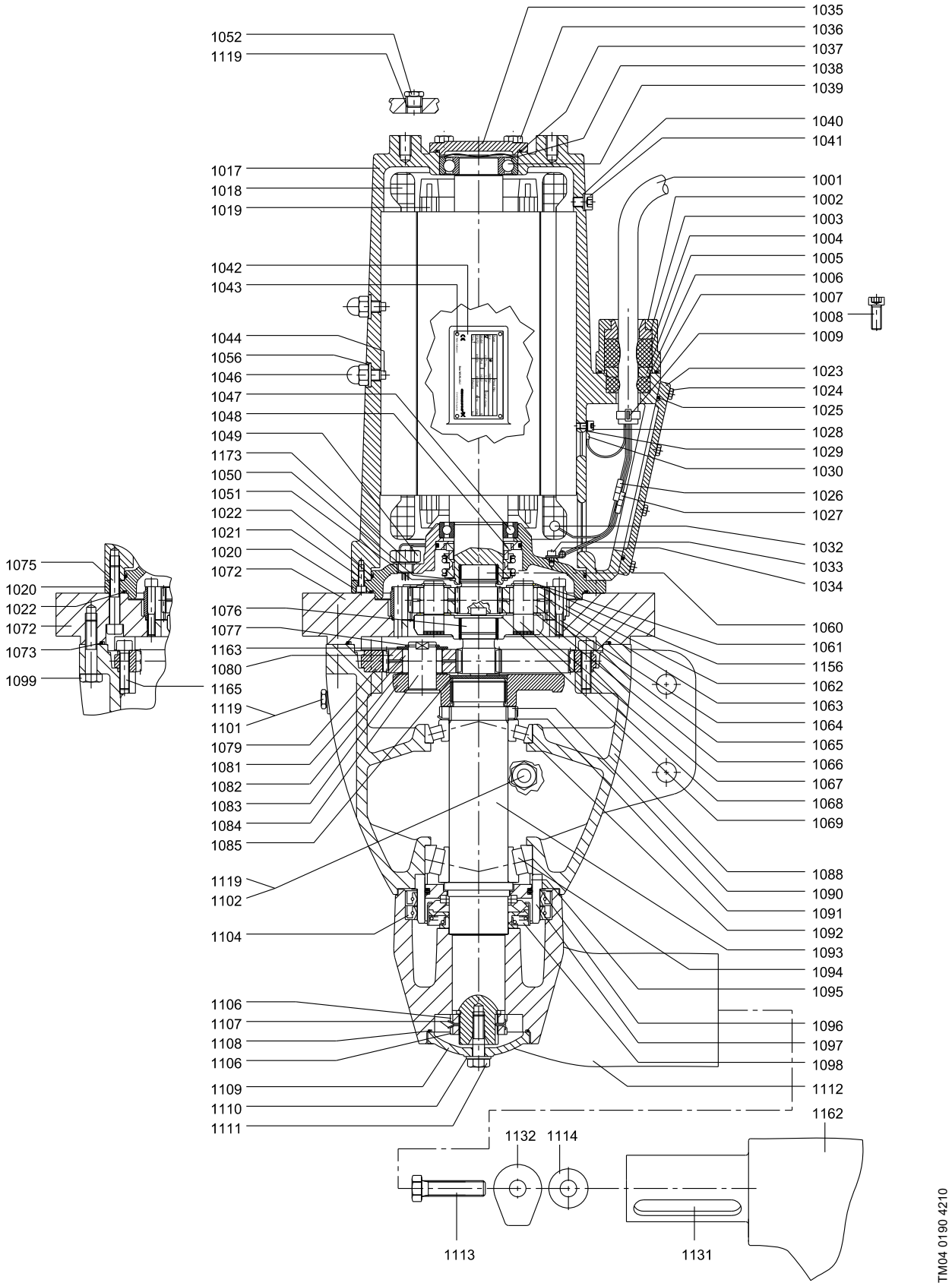
1052
1119
1017
1018
1019
1042
1043
1044
1056
1046
1047
1048
1049
1173
1050
1051
1022
1021
1020
1072
1076
1077
1163
1080
1165
1119
1101
1079
1081
1082
1083
1084
1085
1119
1102
1104
1106
1107
1108
1106
1109
1110
1111
1075
1020
1022
1072
1073
1099
1035
1036
1037
1038
1039
1040
1041
1001
1002
1003
1004
1005
1006
1007
1008
1009
1023
1024
1025
1028
1029
1030
1026
1027
1032
1033
1034
1060
1061
1156
1062
1063
1064
1065
1066
1067
1068
1069
1088
1090
1091
1092
1093
1094
1095
1096
1097
1098
1112
1162
1132
1114
1113
1131
TM04 0190 4210

Gear

Pos.	Description	50 Hz	AFG.30.260 AFG.46.260 AFG.60.260 AFG.65.260	AFG.75.260	AFG.34.260 AFG.48.260	AFG.40.260 AFG.58.260	AFG.55.260
		60 Hz SI	-	-	AFG.55.260 AFG.75.260	-	-
		60 Hz US	-	-	AFG.75.102 AFG.100.102	-	-
			Step 1	Step 1	Step 1	Step 1	Step 1
		Kit No	95065518	95065517	95065524	95065495	95065515
1060	Sun wheel i = 4.83		1	-	-	-	-
	Sun wheel i = 5.6		-	1	-	-	-
	Sun wheel i = 6.75		-	-	1	-	-
	Sun wheel i = 4.28		-	-	-	1	-
	Sun wheel i = 3.87		-	-	-	-	1
1061	Retaining ring		3	3	3	3	3
1062	Ring gear		1	1	1	1	1
1063	Planet gear i = 4.83		3	-	-	-	-
	Planet gear i = 5.6		-	3	-	-	-
	Planet gear i = 6.75		-	-	3	-	-
	Planet gear i = 4.28		-	-	-	3	-
	Planet gear i = 3.87		-	-	-	-	3
1065	Roller		114	114	114	114	114
1066	Washer		3	3	3	3	3
1067	Planet carrier		1	1	1	1	1
1068	Planet pin		3	3	3	3	3
1069	Cover		1	1	1	1	1
1156	Washer		3	3	3	3	3

Pos.	Description	50 Hz	AFG.60.260	AFG.75.260 AFG.34.260 AFG.48.260	AFG.30.260 AFG.40.260 AFG.55.260 AFG.58.260	AFG.46.260 AFG.65.260
		60 Hz SI	-	AFG.55.260 AFG.75.260	-	-
		60 Hz US	-	AFG.75.102 AFG.100.102	-	-
			Step 2	Step 2	Step 2	Step 2
		Kit No	95038611	95065496	95038769	95065525
1076	Sun wheel i = 4.57		1	-	-	-
	Sun wheel i = 4.12		-	1	-	-
	Sun wheel i = 6.0		-	-	1	-
	Sun wheel i = 5.16		-	-	-	1
1077	Retaining ring		3	3	3	3
1079	Ring gear		1	1	1	1
1080	Planet gear i = 4.57		3	-	-	-
	Planet gear i = 4.12		-	3	-	-
	Planet gear i = 6.0		-	-	3	-
	Planet gear i = 5.16		-	-	-	3
1081	Roller		108	108	108	108
1082	Washer		3	3	3	3
1083	Planet carrier		1	1	1	1
1084	Planet pin		3	3	3	3
1085	Cover		1	1	1	1
1163	Washer		3	3	3	3

Propeller

Pos.	Description		2 blades	3 blades
		Kit No	95038586	95038587
1104	Lip seal		2	2
1106	Slotted nut		2	2
1108	O-ring		1	1
1109	Hub cover		1	1
1110	Washer		1	1
1111	Hexagon head screw		1	1
1112	Hub		1	1
1113	Hexagon head screw		2	3
1114	Washer		2	3
1131	Parallel key		2	3
1132	Blinds		2	3
1162	Propeller blade		2	3

AFG non-ATEX

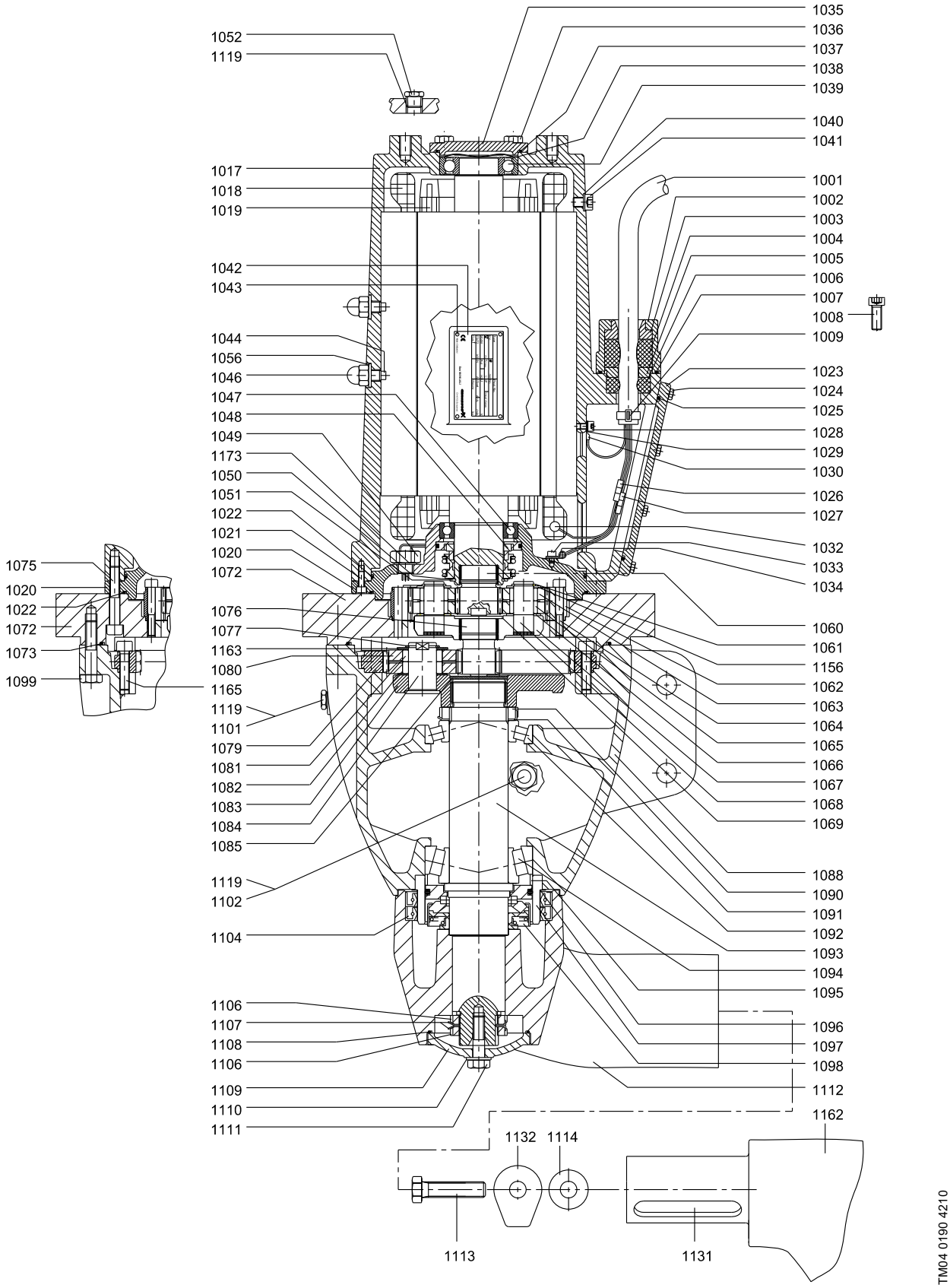
1052
1119
1017
1018
1019
1042
1043
1044
1056
1046
1047
1048
1049
1173
1050
1051
1022
1021
1020
1072
1076
1077
1163
1080
1165
1119
1101
1079
1081
1082
1083
1084
1085
1119
1102
1104
1106
1107
1108
1106
1109
1110
1111
1075
1020
1022
1072
1073
1099
1035
1036
1037
1038
1039
1040
1041
1001
1002
1003
1004
1005
1006
1007
1008
1009
1023
1024
1025
1028
1029
1030
1026
1027
1032
1033
1034
1060
1061
1156
1062
1063
1064
1065
1066
1067
1068
1069
1088
1090
1091
1092
1093
1094
1095
1096
1097
1098
1112
1162
1132
1114
1113
1131
TM04 0190 4210

Motor

Pos.	Description		Non-Ex version		Ex version (50 Hz only)	
		50 Hz	AFG.30.260 AFG.34.260 AFG.40.260 AFG.60.260	AFG.46.260 AFG.48.260 AFG.55.260 AFG.58.260 AFG.65.260 AFG.75.260	AFG.60.260	AFG.75.260
		60 Hz SI	AFG.55.260	AFG.75.260	-	-
		60 Hz US	AFG.75.102	AFG.100.102	-	-
		Kit No	95038589	95038590	95038591	95038592
1002	Cable flange		1	1	1	1
1007	O-ring		1	1	1	1
1008	Hexagon socket head cap screw		2	2	2	2
1017	Motor housing		1	1	1	1
1018	Stator 6-pole		1	1	1	1
1019	Rotor with shaft 6-pole		1	1	1	1
1020	Motor flange		1	1	1	1
1021	Hexagon socket head cap screw		3	3	3	3
1022	O-ring		2	2	2	2
1023	Terminal box cover		1	1	1	1
1024	Hexagon head screw		8	8	8	8
1025	O-ring		1	1	1	1
1028	Hexagon socket cap screw		1	1	1	1
1029	Lock washer		1	1	1	1
1033	Hexagon socket head cap screw		1	1	1	1
1034	Cable clamp		1	1	1	1
1035	Bearing cover		1	1	1	1
1036	Hexagon head screw		4	4	4	4
1037	O-ring		1	1	1	1
1038	Compensation disc		1	1	1	1
1039	Ball bearing		1	1	1	1
1040	Washer		1	1	1	1
1041	Hexagon socket head cap screw		1	1	1	1
1044	Set screw		2	2	2	2
1046	Nut		2	2	2	2
1047	Ball bearing		1	1	1	1
1048	Mechanical shaft seal		1	1	1	1
1049	Water-in-oil sensor		1	1	1	1
1050	Shim		1	1	1	1
1051	Retaining ring		1	1	1	1
1052	Plug		1	1	1	1
1053	Connection for protective earthing		-	-	1	1
1056	Seal washer		2	2	2	2
1119	PTFE tape		1	1	1	1
1173	Seal washer		1	1	1	1

AFG non-ATEX

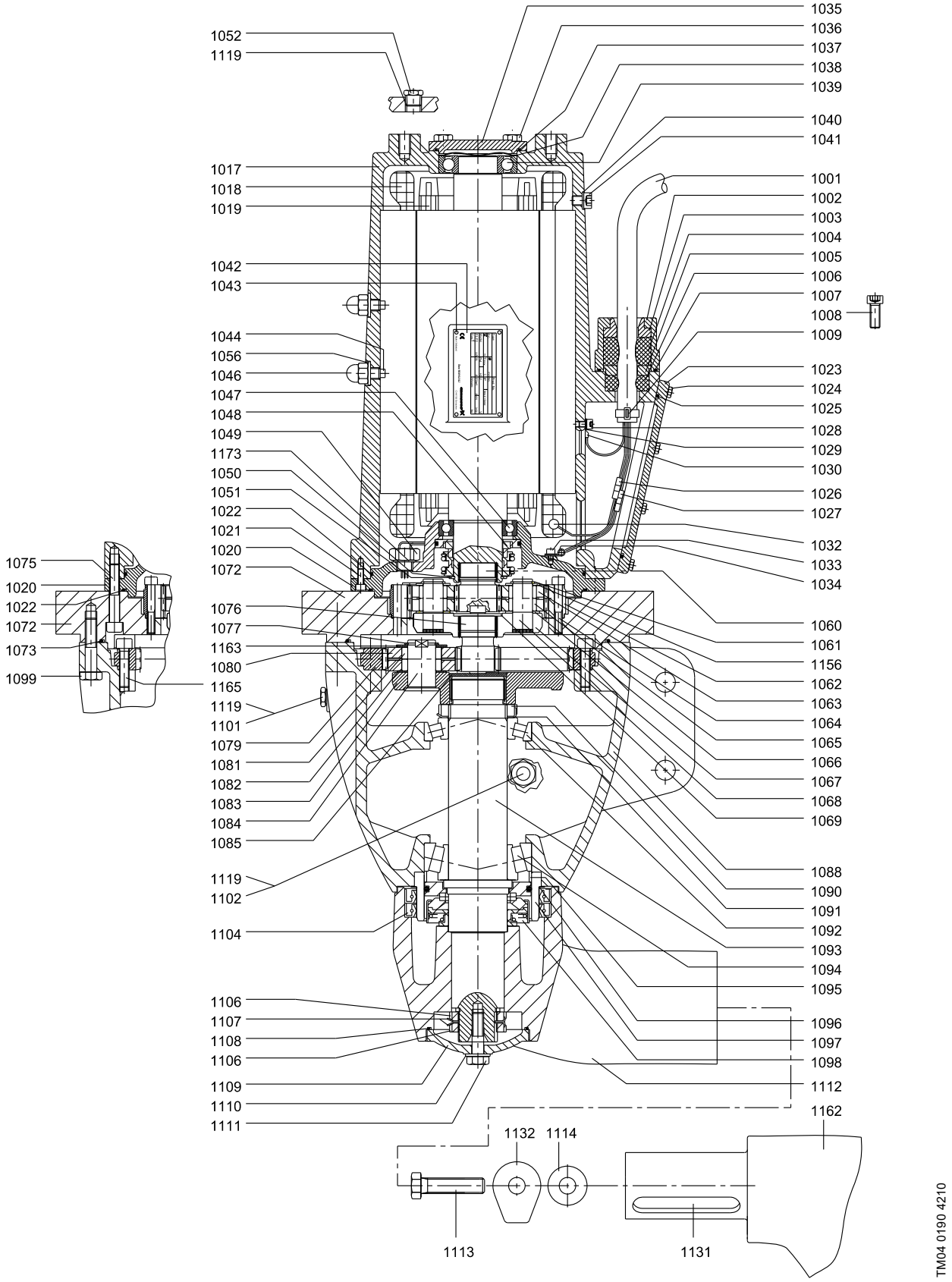
1052
1119
1017
1018
1019
1042
1043
1044
1056
1046
1047
1048
1049
1173
1050
1051
1022
1021
1020
1072
1076
1077
1163
1080
1165
1119
1101
1079
1081
1082
1083
1084
1085
1119
1102
1104
1106
1107
1108
1106
1109
1110
1111
1075
1020
1022
1072
1073
1099
1035
1036
1037
1038
1039
1040
1041
1001
1002
1003
1004
1005
1006
1007
1008
1009
1023
1024
1025
1028
1029
1030
1026
1027
1032
1033
1034
1060
1061
1156
1062
1063
1064
1065
1066
1067
1068
1069
1088
1090
1091
1092
1093
1094
1095
1096
1097
1098
1112
1162
1132
1114
1113
1131
TM04 0190 4210

SMD

SMD.09-18 (50/60 Hz) and SMD.13-23 (60 Hz North America)

Bearing, motor

Pos.	Description/Kit No	99010478
1038	Compensation disc	1
1039	Ball bearing	1
1047	Ball bearing	1
1058	Circlip	1

Cable (4G1.5+3x1.0)

Pos.	Description/Kit No	96591649	96659473
181	Cable with plug	10 m / 32 ft	15 m / 49 ft
198	O-ring	1	1

Cable screened (4G2.5+3x1.0)

Pos.	Description/Kit No	96102486	96689980
181	Cable with plug	10 m / 32 ft	15 m / 49 ft
198	O-ring	1	1

Connection

Pos.	Description/Kit No	99010477
1013	Male plug connector	1
1016	Circlip	2
1030	Cable shoe	1
1031	Connector pin	7

Bolts

Pos.	Description/Kit No	99010476
1021	Screw	3
1028	Screw	1
1029	Lock washer	1
1040	U-washer	1
1041	Screw	1
1111	Screw	1
1126	Screw	3
1144	Countersunk screw	3
1147	Countersunk screw	3
1149	Screw	2

Wear ring

Pos.	Description/Kit No	99010484
1146	Wear ring	1
1147	Countersunk screw	3

Stator with housing

Pos.	Description/Kit No	99010479
1017	Motor housing	1
1018	Stator	1

Gasket kit

Pos.	Description/Kit No		99010475
198	O-ring	34.0 x 3.0	1
1022	O-ring	105.0 x 3.5	1
1040	Washer		1
1098a	O-ring	50.0 x 3.0	2
1100	O-ring	17.86 x 2.62	1
1102	Plug		3
1125	O-ring	139.29 x 3.53	1
1142	O-ring	92.0 x 3.5	1
1143	O-ring	135.0 x 2.5	1

Shaft seal

Pos.	Description/Kit No		99010482
1051	Circlip		1
1098	Mechanical shaft seal		1
1100	O-ring	17.86 x 2.62	1
1149	Screw		2

Moisture switch

Pos.	Description/Kit No	99010490
1027	Cable joint 1.5-2.5	2
1080	Moisture switch	1
1081	Moisture switch holder	1
1082	Screw	1
1084	Screw	2
1085	Lock nut	2
1167	Pin	1

Wear ring

Pos.	Description/Kit No		99010483
1097	Wear ring		1
1098a	O-ring	50.0 x 3.0	2
1102	Plug		3
1104	Lip seal		1
1142	O-ring	92.0 x 3.5	1
1143	O-ring	135.0 x 2.5	1

Lifting belt (SMD.09-18)

Pos.	Description/Kit No	99010480
1136a	Washer	2
1138	Clamping ring	1
1139a	Screw	1
1140a	Lock nut	1

Mounting belt (SMD.09-18.xx.T)

Pos.	Description/Kit No	99010481
1135	Mounting device	1
1136a	Washer	2
1138	Clamping ring	1
1139a	Screw	1
1140a	Lock nut	1
1183	Screw	2
1184	Washer	4
1185	Lock nut	2
1140	Lock nut	2
1136	Washer	4
1139	Screw	2

SMD

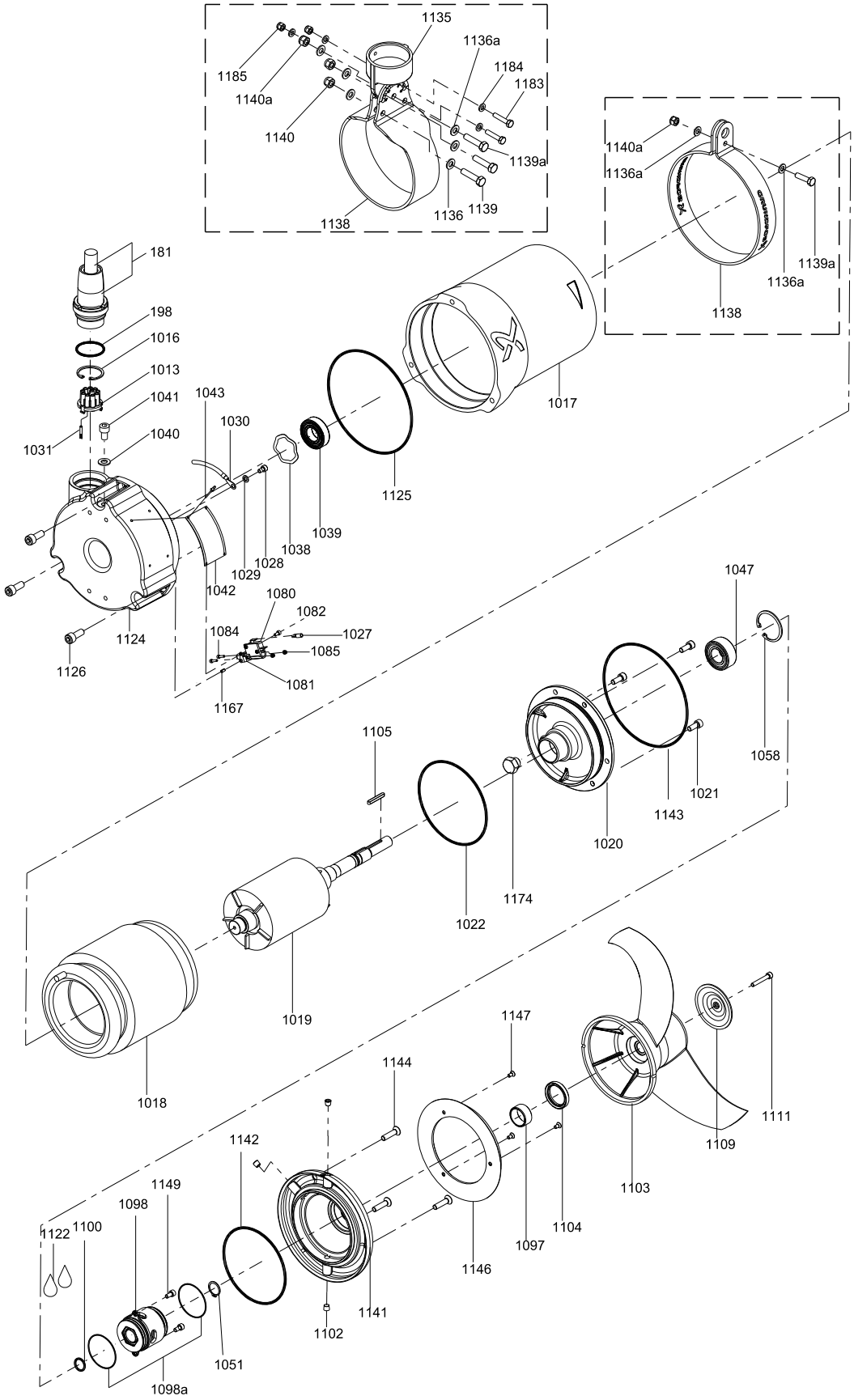
1135
1136a
1184
1183
1185
1140a
1140
1139a
1136
1139
1138
1140a
1136a
1139a
1136a
1138
181
198
1016
1013
1041
1040
1031
1043
1030
1017
1125
1039
1038
1028
1029
1042
1124
1126
1080
1082
1084
1027
1085
1081
1167
1047
1058
1021
1143
1020
1105
1174
1022
1019
1018
1147
1144
1111
1109
1103
1142
1149
1098
1122
1100
1104
1097
1146
1141
1102
1051
1098a
TM06 5260 4015

Propeller

Pos.	Description	50 Hz	-	SMD.09.21	SMD.11.25	SMD.14.25	SMD.18.25
		60 Hz DIN	SMD.10.18	SMD.13.21	SMD.17.25	-	-
		60 Hz ANSI	SMD.13.7	SMD.17.8	SMD.23.10	-	-
		Kit No	99010489	99010485	99010486	99010487	99010488
1103	Propeller 1.0 kW (1.3 hp)		1	-	-	-	-
	Propeller 0.9/1.3 kW (1.7 hp)		-	1	-	-	-
	Propeller 1.1/1.7 kW (2.3 hp)		-	-	1	-	-
	Propeller 1.4 kW		-	-	-	1	-
	Propeller 1.8 kW		-	-	-	-	1
1104	Lip seal		1	1	1	1	1
1105	Parallel key		1	1	1	1	1
1109	Hub cover		1	1	1	1	1
1111	Screw		1	1	1	1	1

SMD

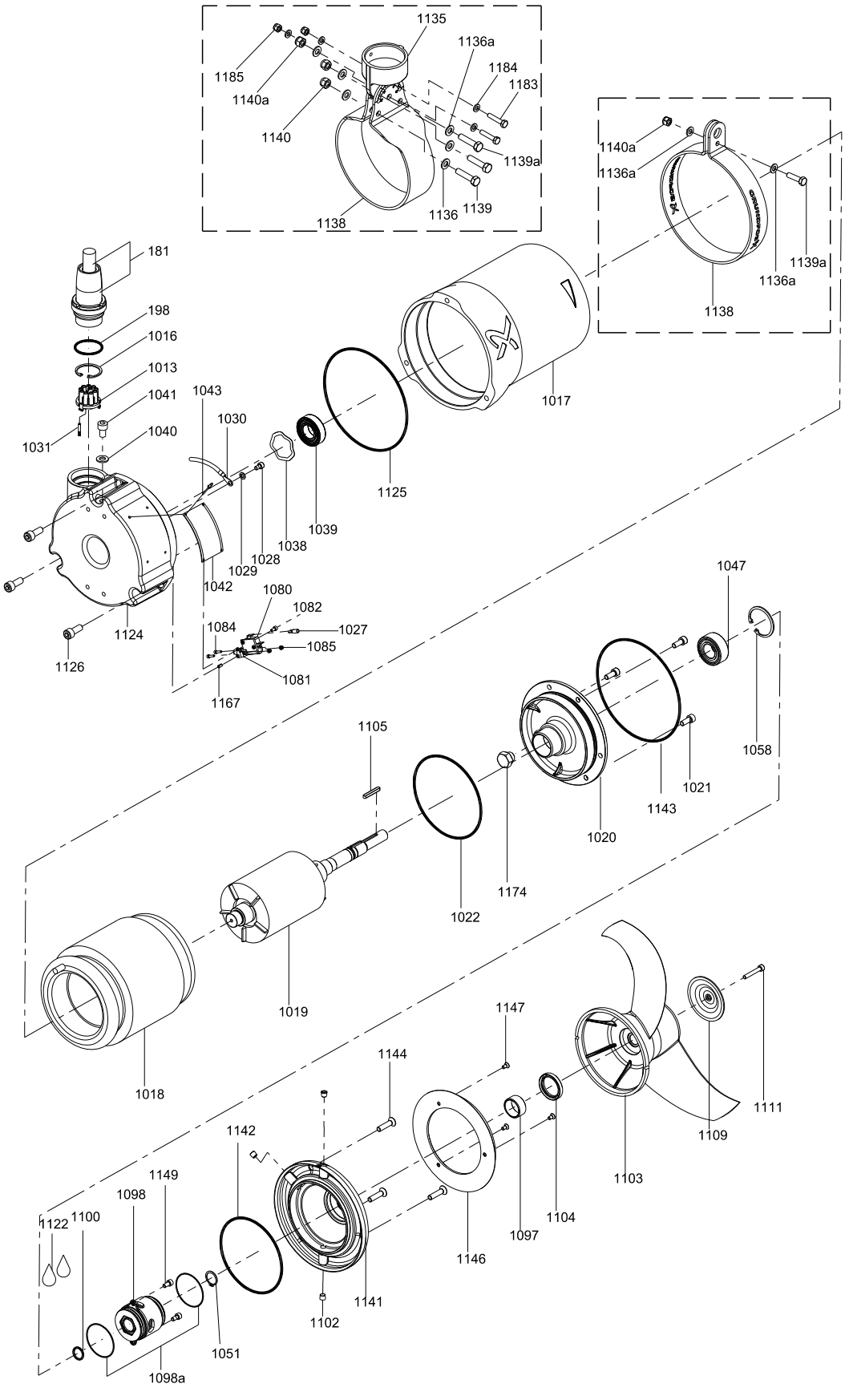
1135
1136a
1184
1183
1185
1140a
1140
1139a
1136
1139
1138
1140a
1136a
1139a
1136a
1138
181
198
1016
1013
1041
1043
1030
1040
1031
1017
1125
1039
1038
1028
1029
1042
1080
1082
1084
1027
1085
1081
1124
1126
1167
1047
1105
1058
1021
1143
1020
1174
1022
1019
1018
1147
1144
1111
1109
1103
1142
1149
1098
1122
1100
1104
1097
1146
1141
1102
1051
1098a
TM06 5260 4015

SMD.19-35 (50/60 Hz) and SMD.30-47 (60 Hz North America)

Bearing, motor

Pos.	Description/Kit No	99010498
1038	Compensation disc	1
1039	Ball bearing	1
1047	Ball bearing	1
1058	Circlip	1

Bolts

Pos.	Description/Kit No	99010496
1021	Screw	3
1028	Screw	1
1029	Lock washer	1
1040	U-Washer	1
1041	Screw	1
1111	Countersunk screw	1
1126	Screw	3
1144	Countersunk screw	3
1147	Countersunk screw	3
1149	Screw	2

Cable (7G1.5+3x1.0)

Pos.	Description/Kit No	96689954	96689955
181	Cable with plug	10 m / 32 ft	15 m / 49 ft
198	O-ring	1	1

Cable screened (4G2.5+3x1.0)

Pos.	Description/Kit No	96102490	96102491
181	Cable with plug	10 m / 32 ft	15 m / 49 ft
198	O-ring	1	1

Connection

Pos.	Description/Kit No	99010497
1013	Male plug connector	1
1016	Circlip	1
1030	Cable shoe	1
1031	Connector pin	10

Gasket kit

Pos.	Description/Kit No		99010495
1007	O-ring	42.0 x 3.0	1
1022	O-ring	144.5 x 3.53	1
1040	Washer		1
1098a	O-ring	50.0 x 3.0	2
1100	O-ring	17.86 x 2.62	1
1102	Plug		3
1125	O-ring	180.0 x 3.5	1
1142	O-ring	129.77 x 3.53	1
1143	O-ring	183.83 x 2.62	1

Lifting belt

Pos.	Description/Kit No	99010500
1136a	Washer	2
1138	Clamping ring	1
1139a	Screw	1
1140a	Lock nut	1

Moisture switch

Pos.	Description/Kit No	99010490
1027	Cable joint 1.5-2.5	2
1080	Moisture switch	1
1081	Moisture switch holder	1
1082	Screw	1
1084	Screw	2
1085	Lock nut	2
1167	Pin	1

Stator with housing

Pos.	Description/Kit No	99010499
1017	Motor Housing	1
1018	Stator	1

Shaft seal

Pos.	Description/Kit No		99010482
1051	Circlip		1
1098	Mechanical shaft seal		1
1100	O-ring	17.86 x 2.62	1
1149	Screw		2

Wear ring

Pos.	Description/Kit No	99010502
1146	Wear ring	1
1147	Countersunk screw	3

Wear ring

Pos.	Description/Kit No		99010501
1097	Wear ring		1
1102	Plug		3
1104	Lip seal		1
1142	O-ring	129.77x3.53	1
1143	O-ring	183.83x2.62	1

Propeller

Pos.	Description	50 Hz		SMD.19.32	SMD.23.37	SMD.28.37	SMD.35.37
		60 Hz DIN	SMD.22.29	SMD.26/28.32	SMD.32/35.37		
		60 Hz ANSI	SMD.30.11	SMD.38.13	SMD.47.15		
		Kit No	99010507	99010503	99010504	99010505	99010506
1103	Propeller 2.2 kW (3.0 hp)		1	-	-	-	-
	Propeller 1.9/2.6/2.8 kW (3.8 hp)		-	1	-	-	-
	Propeller 2.3/3.2/3.5 kW (4.7 hp)		-	-	1	-	-
	Propeller 2.8 kW		-	-	-	1	-
	Propeller 3.5 kW		-	-	-	-	1
1104	Lip seal		1	1	1	1	1
1105	Parallel key		1	1	1	1	1
1109	Hub cover		1	1	1	1	1
1111	Screw		1	1	1	1	1

SMD

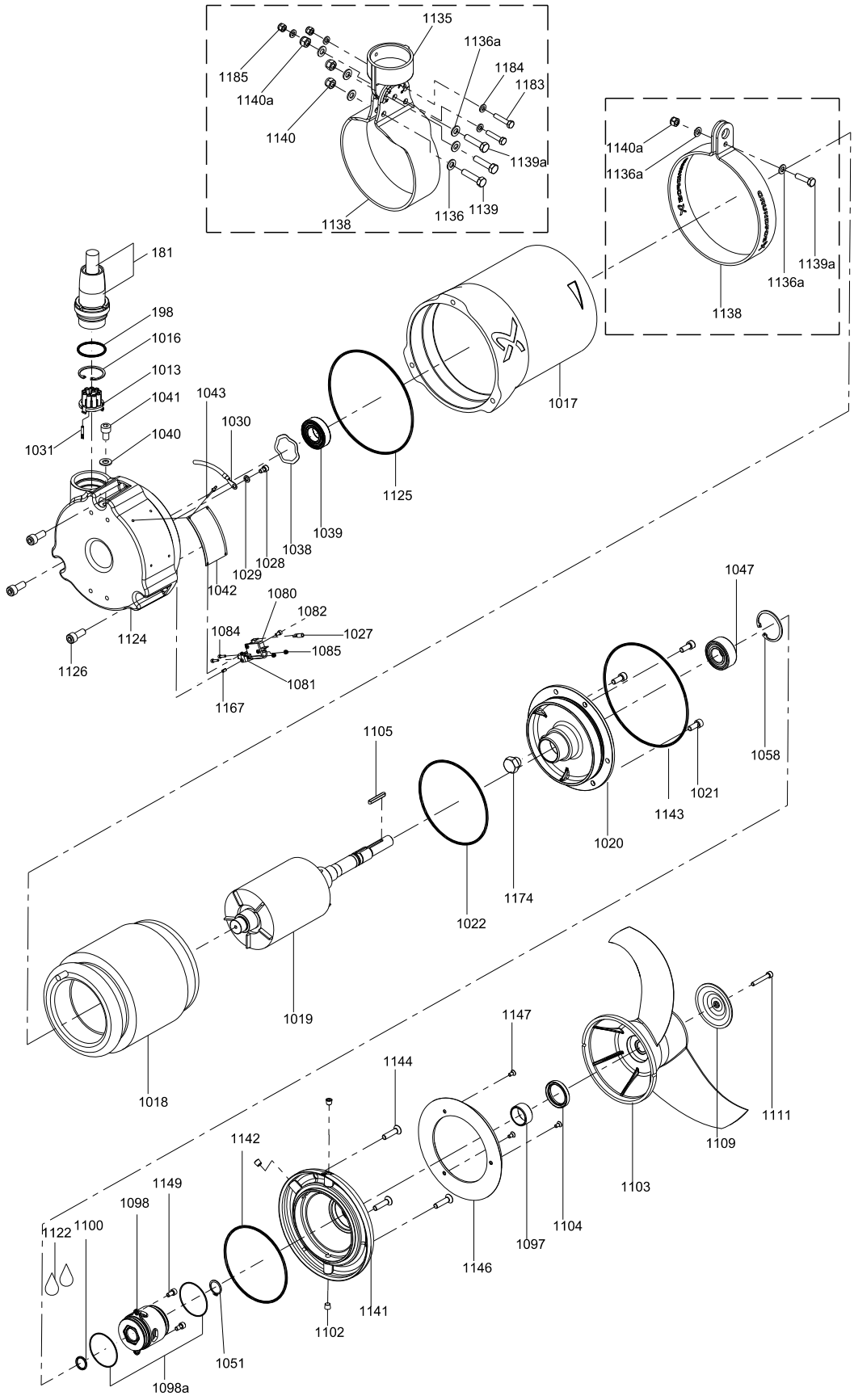
1135
1136a
1184
1183
1185
1140a
1140
1139a
1136
1139
1138
1140a
1136a
1139a
1136a
1138
181
198
1016
1013
1041
1040
1031
1043
1030
1017
1125
1039
1038
1029
1028
1042
1124
1126
1080
1082
1084
1027
1085
1081
1167
1047
1105
1058
1021
1143
1020
1174
1022
1019
1018
1147
1144
1111
1109
1142
1149
1098
1122
1100
1103
1104
1097
1146
1141
1102
1051
1098a
TM06 5260 4015

SMG

SMG.09-40 (50/60 Hz) and SMG.12-55 (60 Hz North America)

Bearing, motor

Pos.	Description/Kit No	95065458
1038	Compensation disc	1
1039	Ball bearing 6206 2RS1/C3	1
1047	Ball bearing 6207 2RS1/C3	1

Bearing, gearbox

Pos.	Description/Kit No	95065459
1090	Slotted nut	1
1091	Lock washer	1
1092	Tapered roller bearing 30207	1
1094	Tapered roller bearing 30207	1

Cable (11G1.5)

Pos.	Description/Kit No	95038410	95038411
1001	Cable	10 m / 32 ft	15 m / 49 ft
1026	Cable joint	6	6
1027	Cable joint	4	4
1030	Cable shoe	1	1

Cable entry 1.5 mm^2

Pos.	Description/Kit No		95065457
1003	Cable guide		1
1004	cable seal, large		1
1005	Thrust washer		1
1006	cable seal, small		1
1007	O-ring	39.45 x 1.78	1
1008	Screw		2
1009	Cable relief		1
1025	O-ring	113.97 x 2.62	1
1026	Cable joint		10
1030	Cable shoe		1
-	Shrink tube for connections		10

Gear housing

Note: Gear housing kit parts are pre-assembled.

Pos.	Description/Kit No	95038404
1088	Gear housing	1
1089	Circlip	1
1090	Slotted nut	1
1091	Lock washer	1
1092	Tapered roller bearing 30207	1
1093	Gear shaft	1
1094	Tapered roller bearing 30207	1
1101	Drain plug with magnet	1
1102	Plug	2
1105	Parallel key	1
1095	Intermediate ring	1
1119	PTFE tape	1

Gasket kit

Pos.	Description/Kit No		95065456
1004	cable seal, large		1
1006	cable seal, small		1
1007	O-ring	39.45 x 1.78	1
1022	O-ring	158.42 x 2.62	2
1025	O-ring	113.97 x 2.62	1
1037	O-ring	56.82 x 2.62	1
1048	Mechanical shaft seal, rotor		1
	Mechanical shaft seal, stator		1
1050	Shim		1
1051	Circlip		1
1108	O-ring	85.0 x 2.5	1

Radial seal

Pos.	Description/Kit No		95039130
1022	O-ring	158.42 x 2.62	1
1104	Lip seal		2
1108	O-ring	85.0 x 2.5	1
	O-ring	105.0 x 3.0	1
	O-ring	184.0 x 3.0	1
1110	Washer		1
1157	Gasket NBR	70 D86/66 x 2	1
	Gasket NBR	70 D96 x 75 x 2	1

Shaft seal

Pos.	Description/Kit No	95065462
1095	Intermediate ring	1
1098	Mechanical shaft seal, rotor	1
	Mechanical shaft seal, stator	1

Water-in-oil sensor

Pos.	Description/Kit No	95038409
1049	Water-in-oil sensor	1
1173	Seal washer	1

Wear ring

Pos.	Description/Kit No		95037374
1022	O-ring	158.42 x 2.62	1
1097	Wear ring ceramic		1
1104	Lip seal		2
1108	O-ring	85.0 x 2.5	1
	O-ring	105.0 x 3.0	1
	O-ring	184.0 x 3.0	1
1110	Washer		1
1157	Gasket NBR	70 D86/66 x 2	1
	Gasket NBR	70 D96 x 75 x 2	1

SMG.09-40 (50/60 Hz) and SMG.12-55 (60 Hz North America)

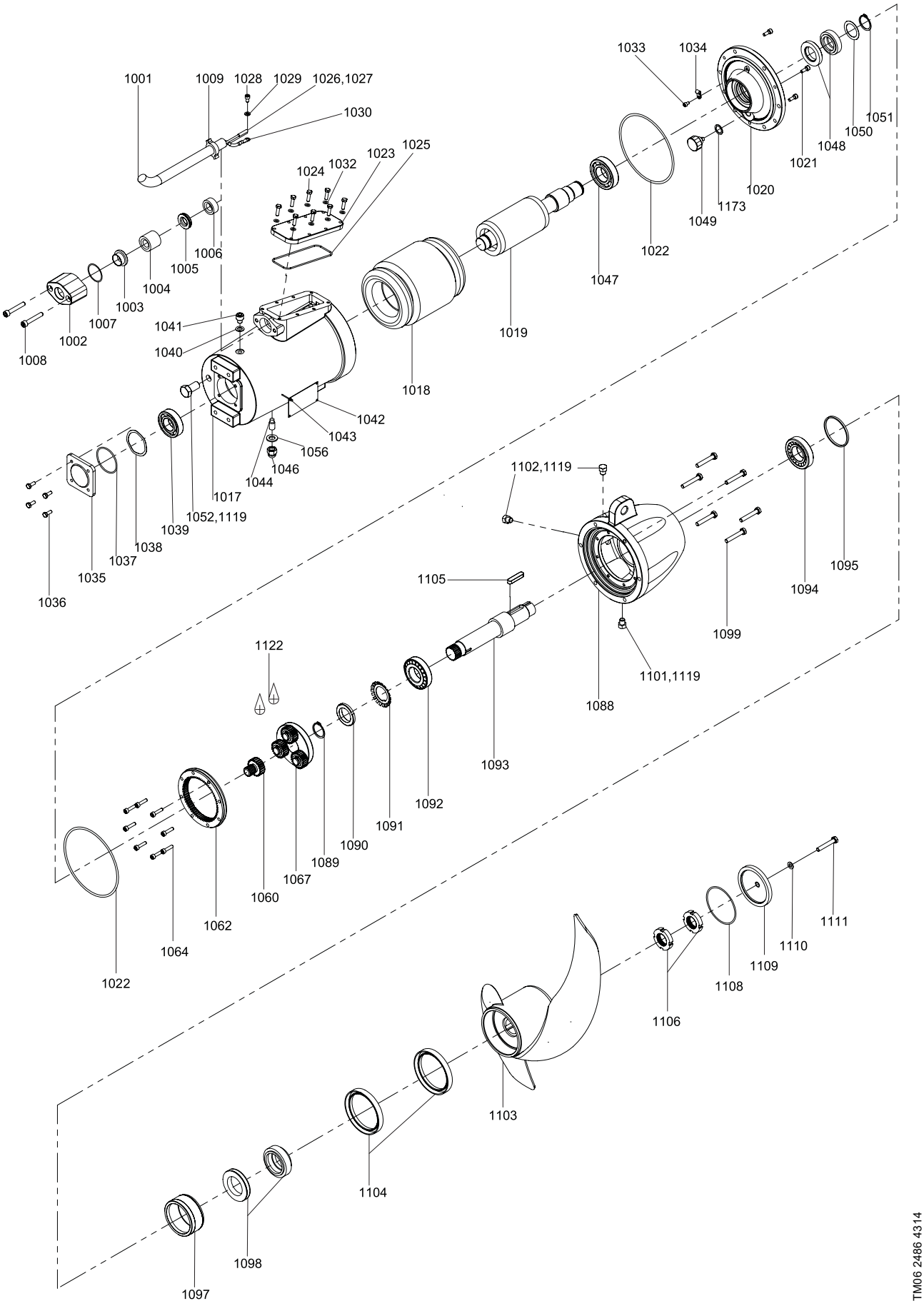

Gear

Pos.	Description						
		50 Hz	SMG.09.55 SMG.12.63 SMG.16.63	-	SMG.30.71 SMG.36.71	SMG.20.71 SMG.25.71	-
		60 Hz SI	-	SMG.09.55 SMG.12.63 SMG.16.63	-	SMG.33.71 SMG.38.71 SMG.40.71	SMG.20.71 SMG.25.71
		60 Hz US	-	SMG.12.22 SMG.16.25 SMG.22.25	-	SMG.44.28 SMG.55.28	SMG.27.28 SMG.34.28
		Kit No	i = 3.556	i = 4.286	i = 4.833	i = 5.600	i = 6.750
			95065513	95065494	95065510	95066609	95065523
1060	Sun wheel		1	1	1	1	1
1062	Ring gear		1	1	1	1	1
1067	Planet gear complete		1	1	1	1	1

Motor

Note: Motor kit parts are pre-assembled.

Pos.	Description	50/60 Hz	SMG.09-16	SMG.20-40
		60 Hz US	SMG.12-22	SMG.27-55
		Kit No	95039700	95039701
1002	Cable flange		1	1
1007	O-ring		1	1
1008	Cylinder head screw		2	2
1017	Motor housing		1	1
1018	Stator winded 6-pole 1.8 kW (2.4 hp)		1	-
	Stator winded 4-pole 3.6 kW (4.8 hp)		-	1
1019	Rotor with shaft 6-pole 1.8 kW (2.4 hp)		1	-
	Rotor with shaft 4-pole 3.6 kW (4.8 hp)		-	1
1020	Motor flange		1	1
1021	Cylinder head screw		3	3
1022	O-ring		2	2
1023	Terminal box cover		1	1
1024	Hexagon screw		8	8
1025	O-ring		1	1
1028	Cylinder head screw		1	1
1029	Lock washer		1	1
1033	Cylinder head screw		1	1
1034	Cable clamp		1	1
1035	Bearing cover		1	1
1036	Hexagon head screw		4	4
1037	O-ring 56.82 x 2.62		1	1
1038	Compensation disc		1	1
1039	Ball bearing		1	1
1040	Washer		1	1
1041	Cylinder head screw		1	1
1044	Set screw		1	1
1046	Nut		1	1
1047	Ball bearing		1	1
1048	Mechanical shaft seal, rotor		1	1
	Mechanical shaft seal, stator		1	1
1049	Water-in-oil sensor		1	1
1050	Shim washer		1	1
1051	Circlip		1	1
1052	Plug		1	1
1056	Seal washer		1	1
1173	Seal washer		1	1

Propeller

Pos.	Description	50/60 Hz	SMG.09.55	SMG.12.63	SMG.16.63	SMG.20/30/33.71	SMG.25/36/38/40.71
		60 Hz US	SMG.12.22	SMG.16.25	SMG.22.25	SMG. 27/44.28	SMG.34/55.28
		AISI 304	95039713	95039715	95039717	95039719	95039721
		AISI 316	95039714	95039716	95039718	95039720	95039722
1103	Propeller 0.9 kW (1.2 hp)		1	-	-	-	-
	Propeller 1.2 kW (1.6 hp)		-	1	-	-	-
	Propeller 1.6 kW (2.2 hp)		-	-	1	-	-
	Propeller 2.0/3.0/3.3 kW (2.7/4.4 hp)		-	-	-	1	-
	Propeller 2.5/3.6/3.8/4.0 kW (3.4/5.5 hp)		-	-	-		1
1104	Lip seal		2	2	2	2	2
1105	Parallel key		1	1	1	1	1
1106	Slotted nut		2	2	2	2	2
1108	Gasket		1	1	1	1	1
1109	Hub cover		1	1	1	1	1
1110	Washer		1	1	1	1	1
1111	Hexagon head screw		1	1	1	1	1

SMG.09-40 (50/60 Hz) and SMG.12-55 (60 Hz North America)

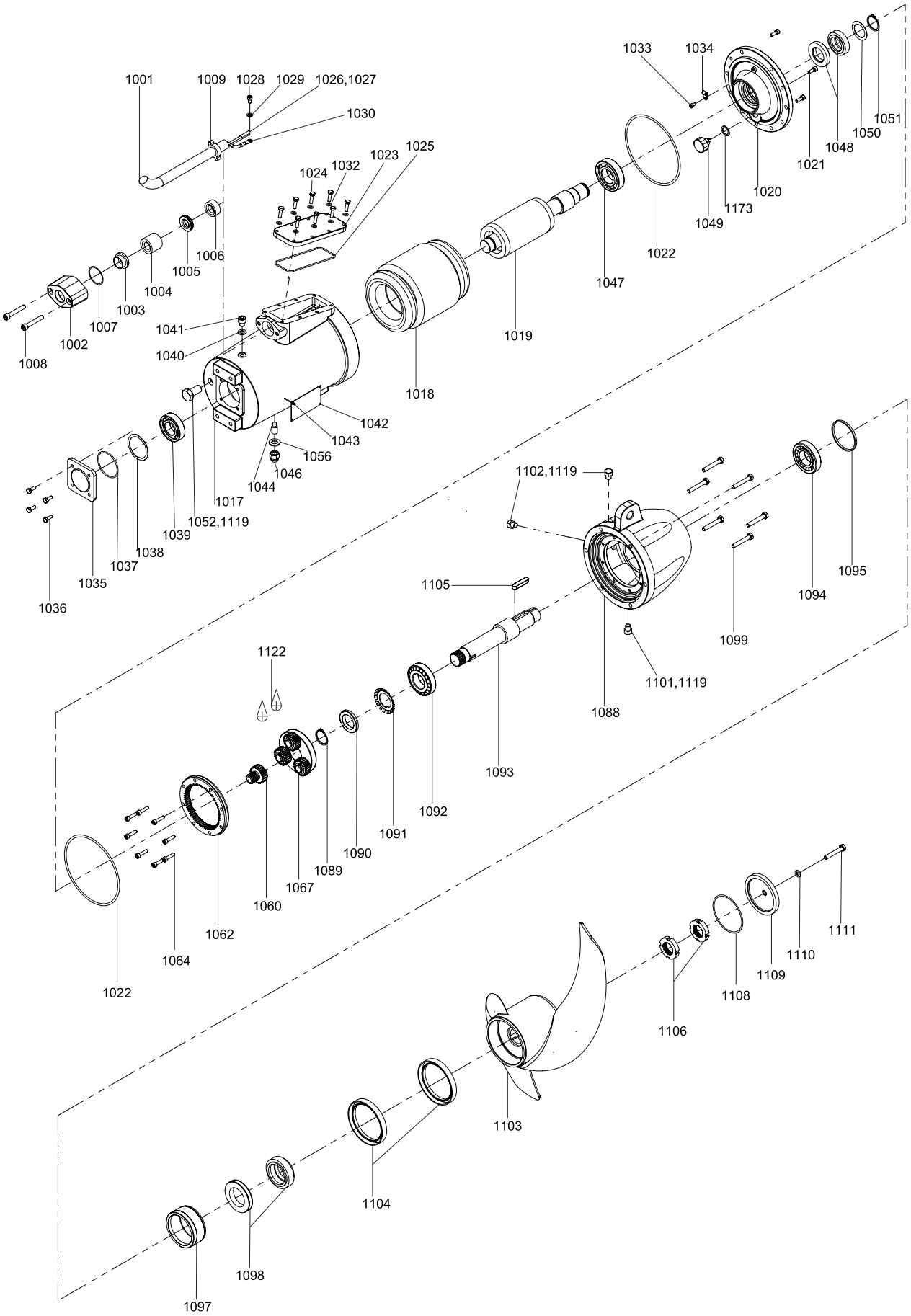

SMG.48-120 (50/60 Hz) and SMG.75-160 (60 Hz North America)

Bearing, motor

Pos.	Description/Kit No	96645955
1038	Compensation disc	1
1039	Ball bearing 6208 2RS1/C3	1
1047	Ball bearing 6010 2RS1/C3	1

Bearing, gearbox

Pos.	Description/Kit No	95065467
1090	Slotted nut; elastic stop	1
1092	Tapered roller bearing 30209	1
1094	Tapered roller bearing 32209	1

Cable (11G2.5)

Pos.	Description/Kit No	95038486	95038487
1001	Cable	10 m / 32 ft	15 m / 49 ft
1026	Cable joint	6	6
1027	Cable joint	4	4
1030	Cable shoe	1	1

Cable entry 2.5 mm^2

Pos.	Description/Kit No		95065465
1003	Cable guide		1
1004	Cable seal, large		1
1005	Thrust washer		1
1006	Cable seal, small		1
1007	O-ring		1
1008	Screw		2
1009	Cable relief		1
1025	O-ring	139.29 x 3.53	1
1026	Cable joint		10
1030	Cable shoe		7
-	Shrink tube for connections		10

Gear housing

Note: Gear housing kit parts are pre-assembled.

Pos.	Description/Kit No	95038481
1088	Gear housing	1
1089	Circlip	1
1090	Slotted nut	1
1092	Tapered roller bearing 30209	1
1093	Gear shaft	1
1094	Tapered roller bearing 32209	1
1101	Drain plug with magnet	1
1102	Plug	2
1105	Parallel key	1
1119	PTFE tape	1

Gasket kit

Pos.	Description/Kit No		95065464
1004	cable seal, large		1
1006	cable seal small		1
1007	O-ring	54.0 x 3.0	1
1022	O-ring	215.57 x 2.62	2
1025	O-ring	139.29 x 3.53	1
1037	O-ring	75.87 x 2.62	1
1048	Mechanical shaft seal, rotor		1
	Mechanical shaft seal, stator		1
1050	Shim		1
1051	Circlip		1
1108	O-ring	94.92 x 2.62	1

Radial seal

Pos.	Description/Kit No		95039131
1022	O-ring	215.59 x 2.62	1
1104	Lip seal		2
1108	O-ring	94.92 x 2.62	1
	O-ring	184.0 x 3.0	1
	O-ring	225.0 x 3.0	1
1110	Washer		1
1157	Gasket		1

Shaft seal

Pos.	Description/Kit No	95065470
1098	Mechanical shaft seal, rotor	1
	Mechanical shaft seal, stator	1

Water-in-oil sensor

Pos.	Description/Kit No	95038409
1049	Water-in-oil sensor	1
1173	Seal washer	1

Wear ring

Pos.	Description/Kit No		95037375
1022	O-ring	215.59 x 3.53	1
1097	Wear ring ceramic		1
1104	Lip seal		2
1108	O-ring	94.92 x 2.62	1
	O-ring	184.0 x 3.0	1
	O-ring	225.0 x 3.0	1
1110	Washer		1
1157	Gasket		1

SMG.48-120 (50/60 Hz) and SMG.75-160 (60 Hz North America)

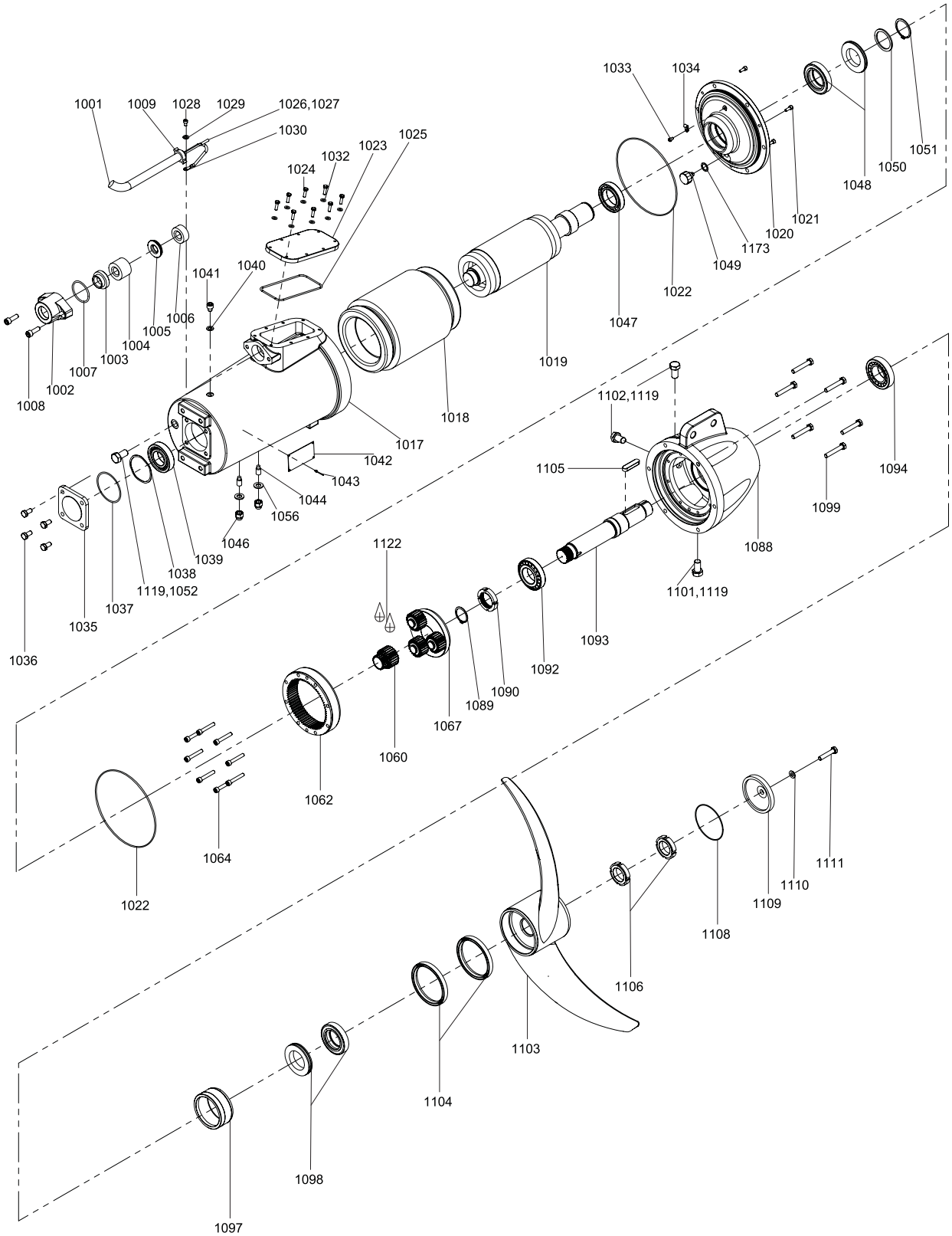

Gear

Pos.	Description				
		50 Hz	SMG.48.73 SMG.85.86 SMG.110.86	SMG.56.86 SMG.70.86	-
		60 Hz SI	-	SMG.95.86 SMG.120.86	SMG.56.86 SMG.70.86
		60 Hz US	-	SMG.130.34 SMG.160.34	SMG.75.34 SMG.95.34
		Kit No	i = 4.833	i = 5.600	i = 6.750
			95065518	95065517	95065524
1060	Sun wheel		1	1	1
1062	Ring gear		1	1	1
1067	Planet gear complete		1	1	1

Motor

Note: Motor kit parts are pre-assembled.

Pos.	Description	50/60 Hz	SMG.48-70	SMG.85-120
		60 Hz US	SMG.75-95	SMG.130-160
		Kit No	95039702	95039703
1002	Cable flange		1	1
1007	O-ring		1	1
1008	Cylinder head screw		2	2
1017	Motor housing		1	1
1018	Stator winded 4-pole 7.0 kW (9.5 hp)		1	-
	Stator winded 4-pole 13.0 kW (17.5 hp)		-	1
1019	Rotor with shaft 4-pole 7.0 kW (9.5 hp)		1	-
	Rotor with shaft 4-pole 13.0 kW (17.5 hp)		-	1
1020	Motor flange		1	1
1021	Cylinder head crew		3	3
1022	O-ring		2	2
1023	Terminal box cover		1	1
1024	Hexagon screw		8	8
1025	O-ring		1	1
1028	Cylinder head screw		1	1
1029	Lock washer		1	1
1033	Cylinder head screw		1	1
1034	Cable clamp		1	1
1035	Bearing cover		1	1
1036	Hexagon head screw		4	4
1037	O-ring		1	1
1038	Compensation disc		1	1
1039	Ball bearing 6208		1	1
1040	U-washer		1	1
1041	Cylinder head screw		1	1
1044	Set screw		2	2
1046	Nut		2	2
1047	Ball bearing 6010		1	1
1048	Mechanical shaft seal, rotor		1	1
	Mechanical shaft seal, stator		1	1
1049	Water-in-oil sensor		1	1
1050	Shim washer		1	1
1051	Circlip		1	1
1052	Plug		1	1
1056	Seal washer		2	2
1173	Seal washer		1	1

Propeller

Pos.	Description	50/60 Hz	SMG.48.73	SMG.56/85/95.86	SMG.70/110/120.86
		60 Hz US	-	SMG.75/130.34	SMG.95/160.34
		AISI 304	95039723	95039725	95039727
		AISI 316	95039724	95039726	95039728
1103	Propeller 4.8 kW (-)		1	-	-
	Propeller 5.6/8.5/9.5 kW (7.5/13.0 hp)		-	1	-
	Propeller 7.0/11.0/12.0 kW (9.5/16.0 hp)		-	-	1
1104	Lip seal		2	2	2
1105	Parallel key		1	1	1
1106	Slotted nut		2	2	2
1108	Gasket		1	1	1
1109	Hub cover		1	1	1
1110	Washer		1	1	1
1111	Screw		1	1	1

SMG.48-120 (50/60 Hz) and SMG.75-160 (60 Hz North America)

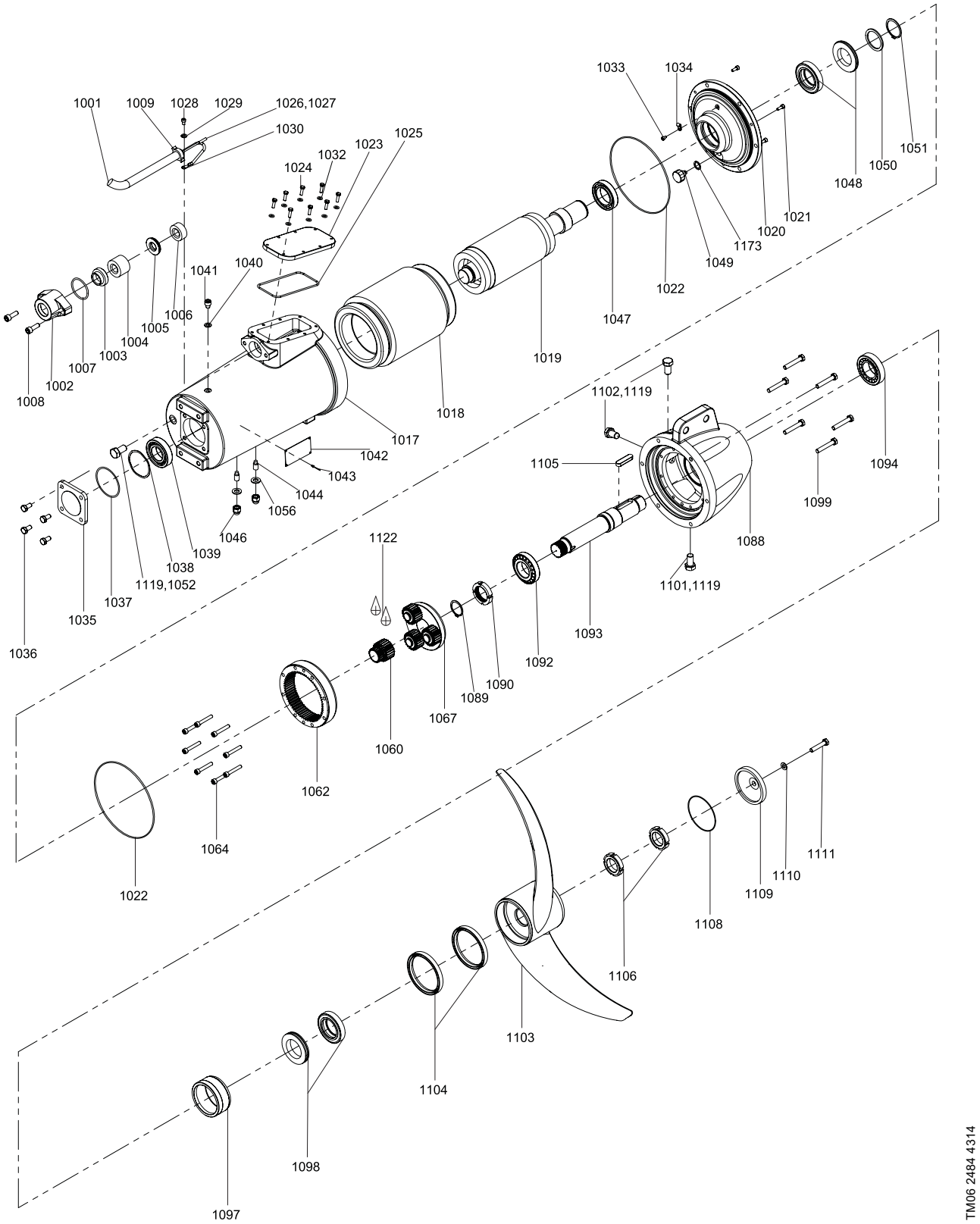

SMG.140-180 (50/60 Hz) and SMG.220 (60 Hz North America)

Bearing, motor

Pos.	Description/Kit No	95065474
1038	Compensation disc	1
1039	Ball bearing 6210 2RS1/C3	1
1047	Ball bearing 6210 2RS1/C3	1

Bearing, gearbox

Pos.	Description/Kit No	95065475
1090	Slotted nut	1
1091	Lock washer	1
1092	Tapered roller bearing 30212	1
1094	Tapered roller bearing 33212	1

Cable (7G4+4x1.0)

Pos.	Description/Kit No	95038520	95038521
1001	Cable	10 m / 32 ft	15 m / 49 ft
1026	Cable joint	6	6
1027	Cable joint	4	4
1030	Cable shoe	1	1

Cable entry 4.0 mm^2

Pos.	Description/Kit No		95065473
1003	Cable guide		1
1004	cable seal, large		1
1005	Thrust washer		1
1006	cable seal, small		1
1007	O-ring	54.0 x 3.0	1
1008	Screw		2
1009	Cable relief		1
1025	O-ring	139.29 x 3.53	1
1026	Cable joint		6
1027	Cable joint, small		4
1030	Cable shoe		7
-	Shrink tube for connections		10

Gear housing

Note: Gear housing kit parts are pre-assembled.

Pos.	Description/Kit No	95038516
1088	Gear housing	1
1090	Slotted nut	1
1091	Lock washer	1
1092	Tapered roller bearing 30212	1
1093	Gear shaft	1
1094	Tapered roller bearing 33212	1
1095	Intermediate ring	1
1101	Drain plug with magnet	1
1102	Plug	2
1105	Parallel key	1
1119	PTFE tape	1

Gasket kit

Pos.	Description/Kit No		95065472
1004	cable seal, large		1
1006	cable seal, small		1
1007	O-ring	54.0 x 3.0	1
1022	O-ring	253.59 x 3.53	2
1025	O-ring	139.29 x 3.53	1
1037	O-ring	91.67 x 3.53	1
1048	Mechanical shaft seal, rotor		1
	Mechanical shaft seal, stator		1
1050	Shim washer		1
1051	Circlip		1
1108	O-ring	120.2 x 3.53	1

Propeller

Pos.	Description/Kit No	50/60 Hz 60 Hz US AISI 304 AISI 316	SMG.140-180 SMG.220 95039729 95039730
1103	Propeller 18.0 kW (22 hp)		1
1104	Lip seal		2
1105	Parallel key		1
1106	Slotted nut		2
1108	Gasket		1
1109	Hub cover		1
1110	Washer		1
1111	Screw		1

Radial seal

Pos.	Description/Kit No		95039132
1022	O-ring	253.59 x 3.53	1
1104	Lip seal		2
1108	O-ring	120.24 x 3.53	1
	O-ring	225.0 x 3.0	1
	O-ring	94.92 x 2.62	1
1110	Washer		1

Shaft seal

Pos.	Description/Kit No	95065478
1095	Intermediate ring	1
1098	Mechanical shaft seal, rotor	1
	Mechanical shaft seal, stator	1

Water-in-oil sensor

Pos.	Description/Kit No	95038409
1049	Water-in-oil sensor	1
1173	Seal washer	1

Wear ring

Pos.	Description/Kit No		95037376
1022	O-ring	253.59 x 3.53	1
1097	Wear ring ceramic		1
1104	Lip seal		2
1108	O-ring	120.2 x 3.53	1
	O-ring	225.0 x 3.0	1
	O-ring	94.92 x 2.62	1
1110	Washer		1

SMG.140-180 (50/60 Hz) and SMG.220 (60 Hz North America)

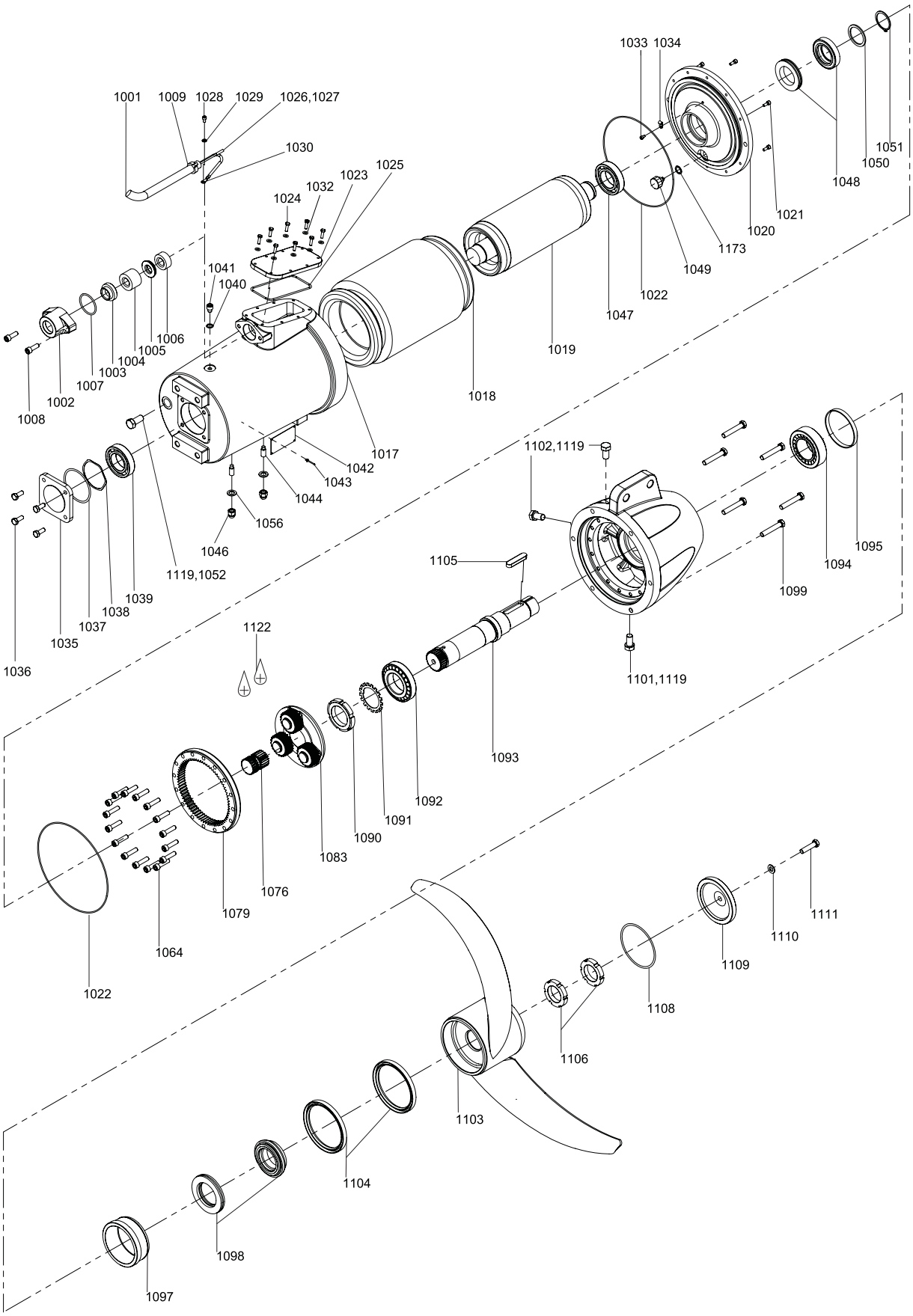

Gear

Pos.	Description	50 Hz	SMG.180.90	SMG.140.90	-
		60 Hz SI	-	-	SMG.160.90
		60 Hz US	-	-	SMG.220.35
		Kit No	i = 4.125	i = 4.571	i = 5.167
			95065496	95038611	95065525
1076	Sun wheel		1	1	1
1079	Ring gear		1	1	1
1083	Planet carrier		1	1	1

Motor

Note: Motor kit parts are pre-assembled.

Pos.	Description	50/60 Hz	SMG.140-180
		60 Hz US	SMG.220
		Kit No	95039704
1002	Cable flange		1
1007	O-ring		1
1008	Cylinder head screw		2
1017	Motor housing		1
1018	Stator 4-pole 24 kW (32 hp)		1
1019	Rotor with shaft 4-pole 24 kW (32 hp)		1
1020	Motor flange		1
1021	Screw		6
1022	O-ring		2
1023	Terminal box cover		1
1024	Screw		8
1025	O-ring		1
1028	Screw		1
1029	Lock washer		1
1033	Screw		1
1034	Cable clamp		1
1035	Bearing cover		1
1036	Screw		4
1037	O-ring		1
1038	Compensation disc		1
1039	Ball bearing 6210		1
1040	U-washer		1
1041	Screw		1
1044	Set screw		2
1046	Nut		2
1047	Ball bearing 6210		1
1048	Mechanical shaft seal, rotor		1
	Mechanical shaft seal, stator		1
1049	Water-in-oil sensor		1
1050	Shim		1
1051	Circlip		1
1052	Plug		1
1056	Seal washer		2
1173	Seal washer		1

SMG.140-180 (50/60 Hz) and SMG.220 (60 Hz North America)

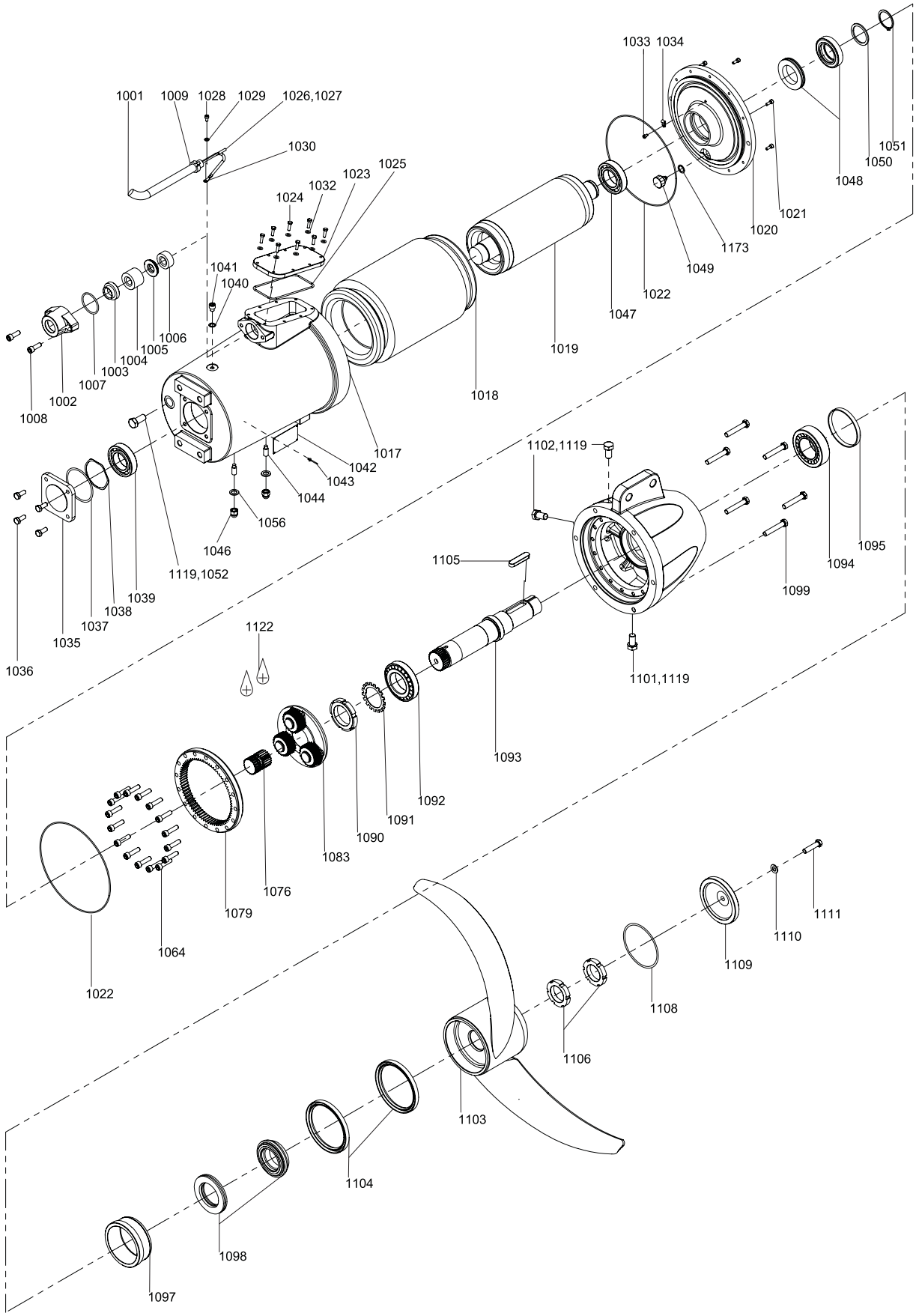

SMG.A (agriculture business)

Propeller

Pos.	Description/Kit No	50 Hz	SMG.A.45	SMG.A.75	SMG.A.80	SMG.A.130	SMG.A.110
		AISI 304	95038464	95038470	95038476	95038477	95039491
		AISI 316	95038468	95038473	95038479	95038480	-
1103	Propeller 4.0 kW		1	-	-	-	-
	Propeller 7.5 kW		-	1	1	-	-
	Propeller 11.0 kW		-	-	-	1	1
1104	Lip seal		2	2	2	2	2
1105	Parallel key		1	1	1	1	1
1106	Slotted nut		2	2	2	2	2
1108	O-ring		1	1	1	1	1
1109	Hub cover		1	1	1	1	1
1110	Washer		1	1	1	1	1
1111	Screw		1	1	1	1	1

Bearing, motor

Pos.	Description/Kit No	SMG.A.45	SMG.A.75-130
		95065458	96645955
1038	Compensation disc	1	1
1039	Ball bearing 6206 2RS	1	1
1047	Ball bearing 6207 2RS	1	1

Bearing, gearbox

Pos.	Description/Kit No	SMG.A.45	SMG.A.75-130
		95065459	95065467
1090	Slotted nut	1	1
1091	Lock washer	1	1
1092	Tapered roller bearing 30212	1	1
1094	Tapered roller bearing 33212	1	1

Cable (12 x 1.5 mm^2, Ø17.3)

Pos.	Description/Kit No	95038410	95038411	95038412
1001	Cable	10 m	15 m	25 m
1030	Cable shoe	1	1	1
1177	Cable joint	10	10	10

Cable entry 1.5 mm^2

Pos.	Description/Kit No		95065473
1003	Cable guide		1
1004	Cable seal, large		1
1005	Thrust washer		1
1006	Cable seal, small		1
1007	O-ring	54.0 x 3.0	1
1008	Screw		2
1009	Cable relief		1
1025	O-ring	133.97 x 3.53	1
1026	Press connector (cable)		6
	Press connector (signal)		4
1030	Cable shoe		7
-	Shrink tube for connectors		

Gasket

Pos.	Description/Kit No		95065455
1004	cable seal, large		1
1006	cable seal, small		1
1007	O-ring	36.22 x 1.78	1
1022	O-ring	158.42 x 2.62	2
1025	O-ring	113.97 x 2.62	1
1037	O-ring	63.22 x 1.78	1
1054	Lip seal		1
1055	Lip seal		1
1108	O-ring	85.0 x 2.5	1

Gear

Pos.	Description	50 Hz	SMG.A.45	SMG.A.75-130
		Kit No	i = 4.28	i = 4.28
			95065494	95065495
1060	Sun wheel		1	1
1062	Ring gear		1	1
1067	Planet carrier		1	1

Gear housing

Pos.	Description/Kit No	95038404
1088	Gear housing	1
1090	Slotted nut	1
1091	Lock washer	1
1092	Tapered roller bearing 30207	1
1093	Gear shaft	1
1094	Tapered roller bearing 30207	1
1101	Drain plug with magnet	1
1102	Plug	2
1105	Parallel key	1
1164	Retaining ring	1

Radial seal

Pos.	Description/Kit No		95039130
1104	Lip seal		2
1108	O-ring	85.0 x 2.5	1
	O-ring	105.0 x 3.0	1
	O-ring	184.0 x 3.0	1
1110	Washer		1
1157	Gasket NBR	70 D96 x 75 x 2	1
	Gasket NBR	70 D86/66 x 2	1

Shaft seal

Pos.	Description/Kit No	95065462
1095	Intermediate ring	1
1098	Mechanical shaft seal	1

Slotted nut

Pos.	Description/Kit No	95038413
1106	Slotted nut	2
1107	Lock washer	2

Wear ring

Pos.	Description/Kit No		95037374
1022	O-ring	158.42 x 2.62	1
1097	Wear ring ceramic		1
1104	Lip seal		2
1108	O-ring	85.0 x 2.5	1
	O-ring	105.0 x 3.0	1
	O-ring	184.0 x 3.0	1
1110	Washer		1
1157	Gasket NBR 70	96 x 75 x 2	1
	Gasket NBR 65	98 x 80 x 6	1

SMG.A.45

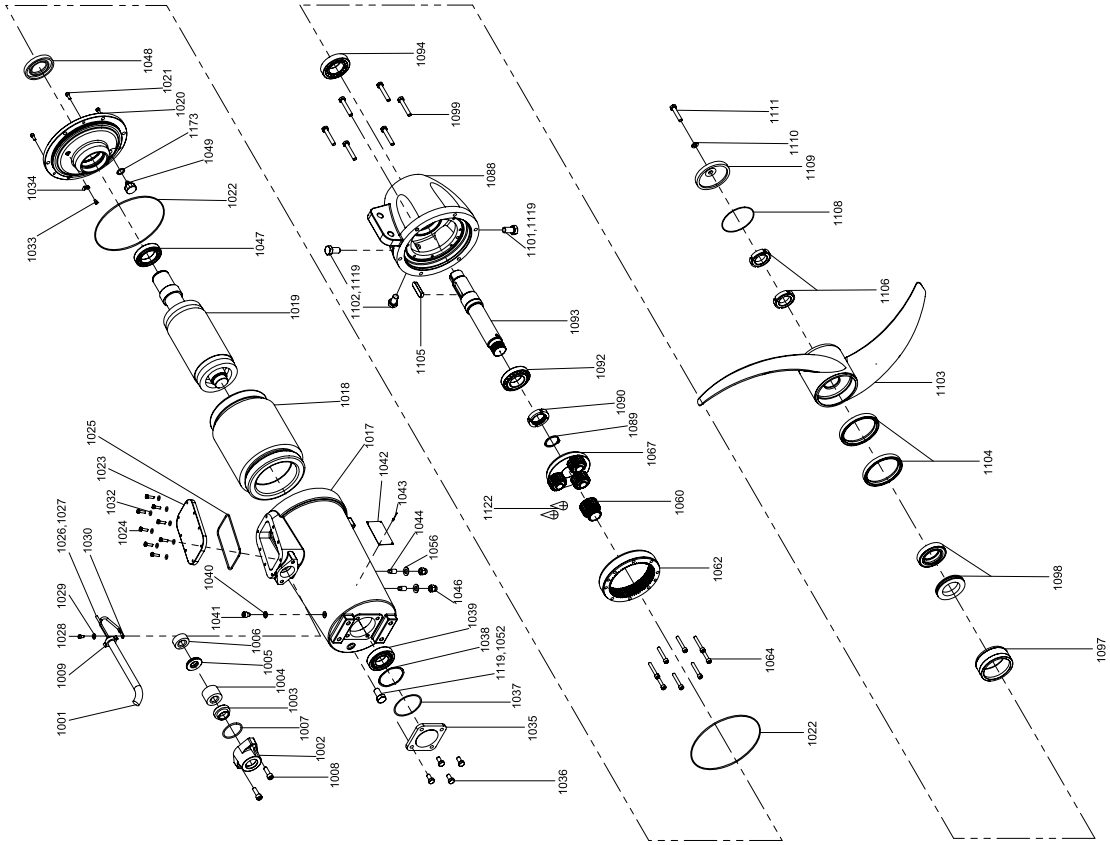

TM07 0287 4717

SMG.A.75-130

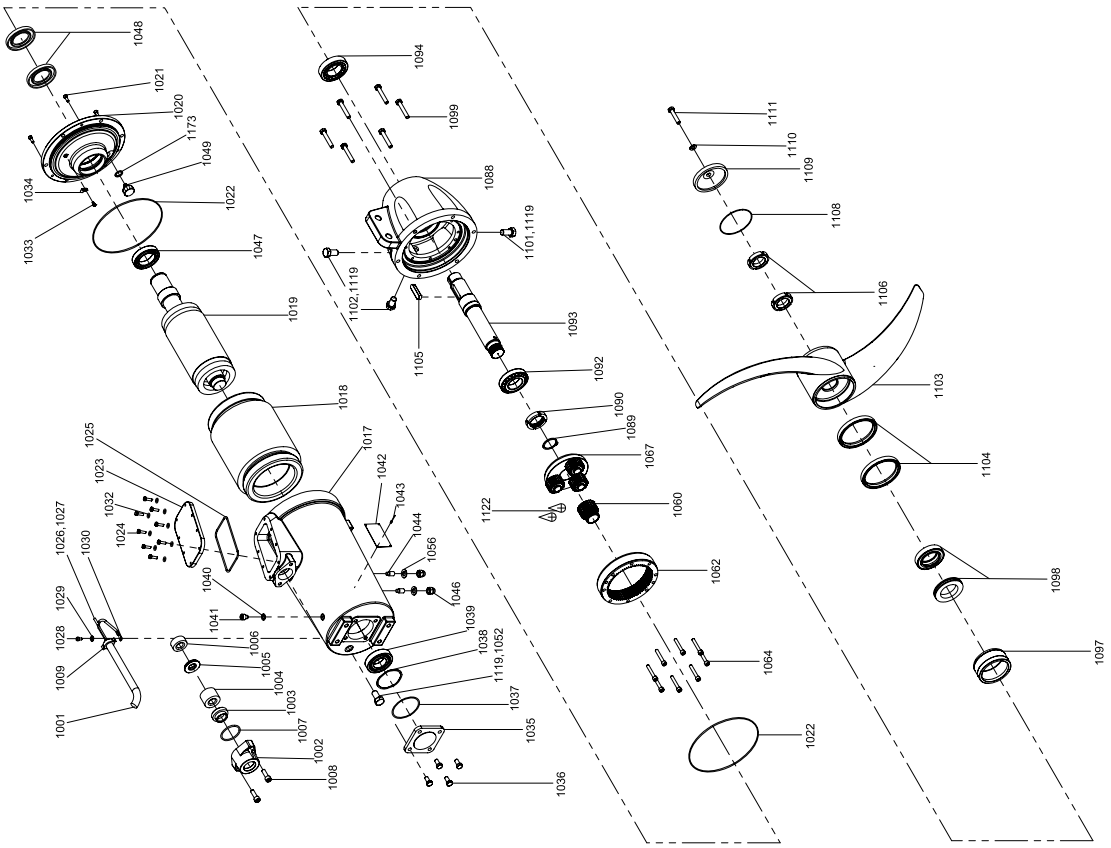

TM07 0288 4717

SMG.H (heavy-duty)

Gear

Pos.	Description/ Kit No	50 Hz					60 Hz
		SMG.H.50	SMG.H.80	SMG.H.110	SMG.H.150	SMG.H.185	SMG.H.90
		i = 5.6	i = 5.6	i = 5.6	i = 4.57	i = 4.12	i = 5.6
		95065517	95065518	95065495	95038611	95065496	95065517
1060	Sun wheel	1	1	1	1	1	1
1062	Ring gear	1	1	1	1	1	1
1067	Planet gear	1	1	1	1	1	1

Propeller

Pos.	Description/Kit No	50 Hz			60 Hz
			SMG.H.50/80/110	SMG.H.150/185	SMG.H.90
		AISI 304	95039491	95038509	95039491
		AISI 306	n/a	95038511	n/a
1103	Propeller		1	1	1
1104	Lip seal		2	2	2
1105	Parallel key		1	1	1
1106	Slotted nut		2	2	2
1108	Gasket NBR	65 D135/113 x 12	1	1	1
1109	Hub cover		1	1	1
1110	Washer		1	1	1
1111	Screw		1	1	1

Bearing, motor

For SMG.H.50/80/110

Pos.	Description/Kit No	96645955
1038	Compensation disc	1
1039	Ball bearing 6208 2RS	1
1047	Ball bearing 6010 2RS	1

For SMG.H.150/185

Pos.	Description/Kit No	95065474
1038	Washer	1
1039	Ball bearing 6210 2RS	2

Bearing, gearbox

Pos.	Description/Kit No	SMG.H.50 SMG.H.80 SMG.H.110	SMG.H.150 SMG.H.185
		95065467	95065475
1090	Slotted nut	1	1
1091	Washer	1	1
1092	Tapered roller bearing 30209	1	1
1094	Tapered roller bearing 33209	1	1

Cable flange

Pos.	Description/Kit No		95036338
1002	Cable, complete		1
1007	O-ring	54.0 x 3.0	1
1025	O-ring	139.29 x 3.53	1
1026	Cable press connector		4
1030	Cable end connector		6
-	Shrink tube	(D6.4-3.2)	-
-	Shrink tube	(D12.7-6.4)	-
-	Shrink tube	(D25.4-12.7)	-
-	Paint, modified epoxy, base (part A)		-
-	Paint, modified epoxy, curing agent (part B)		1

Gear housing and hub cover

Pos.	Description/Kit No	SMG.H.50 SMG.H.80 SMG.H.110	SMG.H.150 SMG.H.185
		95039319	95039320
1088	Gear housing	1	1
1109	Hub cover	1	1

Shaft seal

Pos.	Description/Kit No	SMG.H.50 SMG.H.80 SMG.H.110	SMG.H.150 SMG.H.185
		95065470	95065478
1095	Distance ring	-	1
1098	Mechanical shaft seal, rotor	1	1
	Mechanical shaft seal, stator	1	1

WIO sensor

Pos.	Description/Kit No	95038409
1049	WIO sensor	1
1173	Seal washer	1
-	Contactor	2

SMG.H.50-110

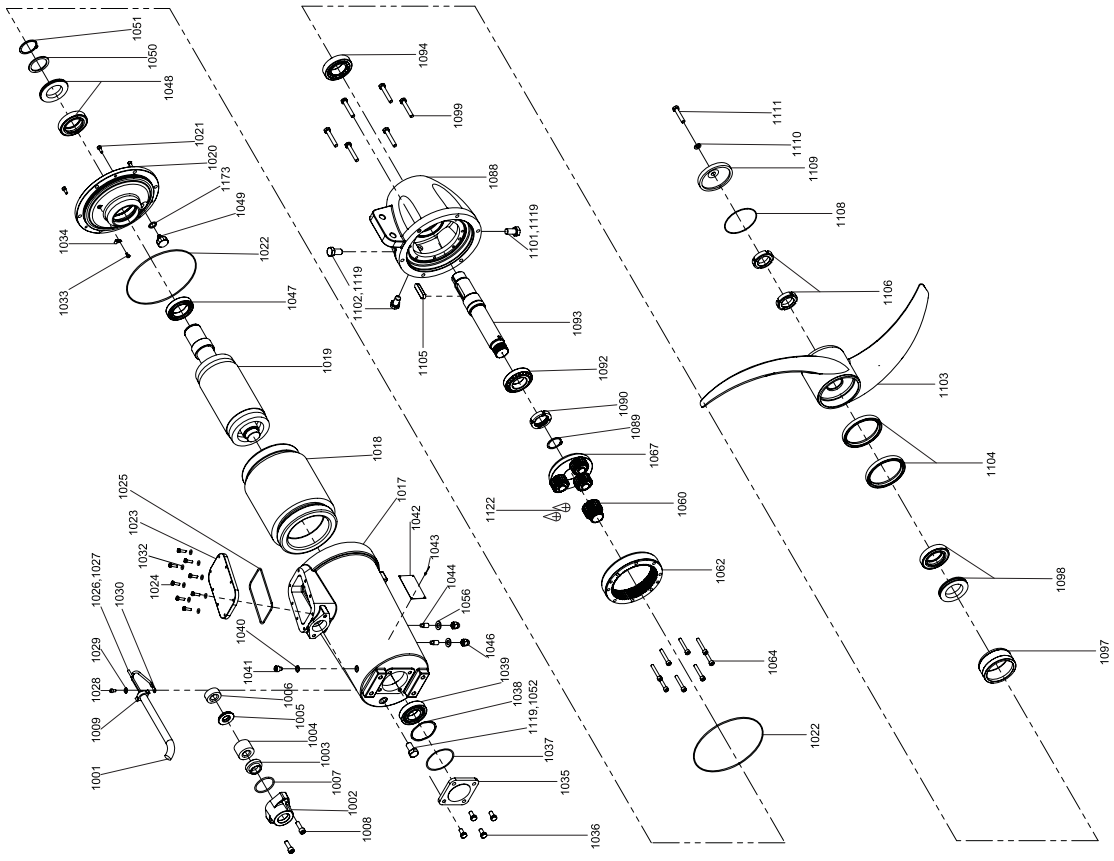

TM06 2484 3917

SMG.H.150-185

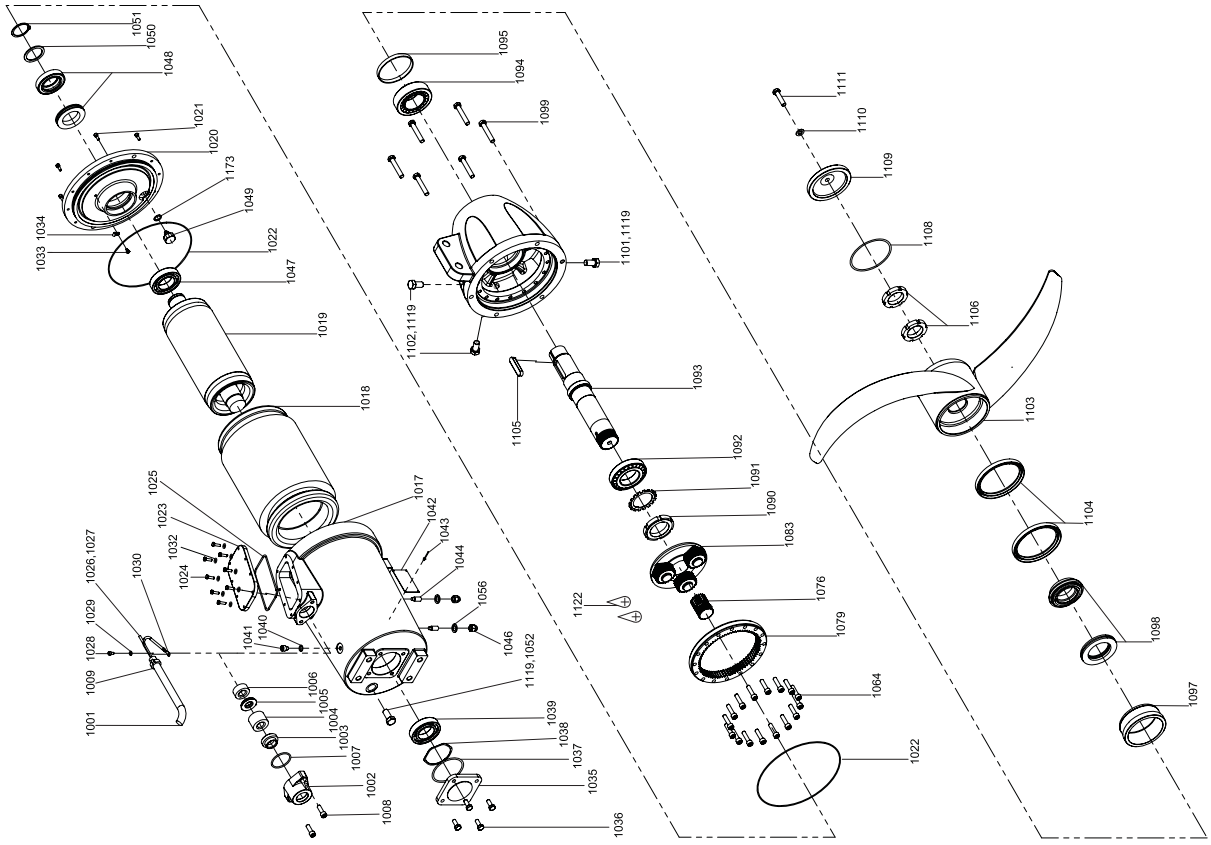

TM06 3063 3917

Gasket

Pos.	Description/Kit No		SMG.H.50 SMG.H.80 SMG.H.110	SMG.H.150 SMG.H.185
			95065464	95065472
1004	Cable seal, large		1	1
1006	Cable seal, small		1	1
1007	O-ring	54.0 x 3.0	1	1
1008	O-ring	94.92 x 2.62	1	-
		120.24 x 3.53	-	1
1022	O-ring	215.57 x 2.62	2	-
		253.59 x 3.53	-	2
1025	O-ring	139.29 x 3.53	1	1
1037	O-ring	75.87 x 2.62	1	-
		91.67 x 3.53	-	1
1048	Shaft seal - rotor		1	1
	Shaft seal - stator		1	1
1050	Washer		1	1
1051	Circlip		1	1
1157	Gasket NBR 65	D106/90 x 10	1	-
		D135/113 x 12	-	1

Radial seal

Pos.	Description/Kit No		SMG.H.50 SMG.H.80 SMG.H.110	SMG.H.150 SMG.H.185
			95039131	95039132
1022	O-ring	215.57 x 2.62	1	-
		253.59 x 3.53	-	1
1104	Lip seal		2	2
1108	O-ring	94.92 x 2.62	1	1
	O-ring	184.0 x 3.0	1	-
		120.24 3.53	-	1
	O-ring	225.0 x 3.0	1	1
1110	Washer		1	1
1157	Gasket NBR 70	D96 x 75 x 2	1	-
	Gasket NBR 65	D106/90 x 10	1	1
	Gasket NBR 65	D135/133 x 12	-	1

Wear ring

Pos.	Description/Kit No		SMG.H.50 SMG.H.80 SMG.H.110	SMG.H.150 SMG.H.185
			95037375	95037376
1022	O-ring	215.57 x 2.62	1	-
		253.59 x 3.53	-	1
1097	Wear ring ceramic		1	1
1104	Lip seal		2	2
1108	O-ring	94.92 x 2.62	1	1
	O-ring	184.0 x 3.0	1	-
		120.24 x 3.53	-	1
	O-ring	225.0 x 3.0	1	1
1110	Washer		1	1
1157	Gasket NBR 65	D135/113 x 12	1	1
	Gasket NBR 65	D106/90 x 10	-	1
	Gasket NBR 70	D96 x 75 x 2	1	-

SMG.H.50-110

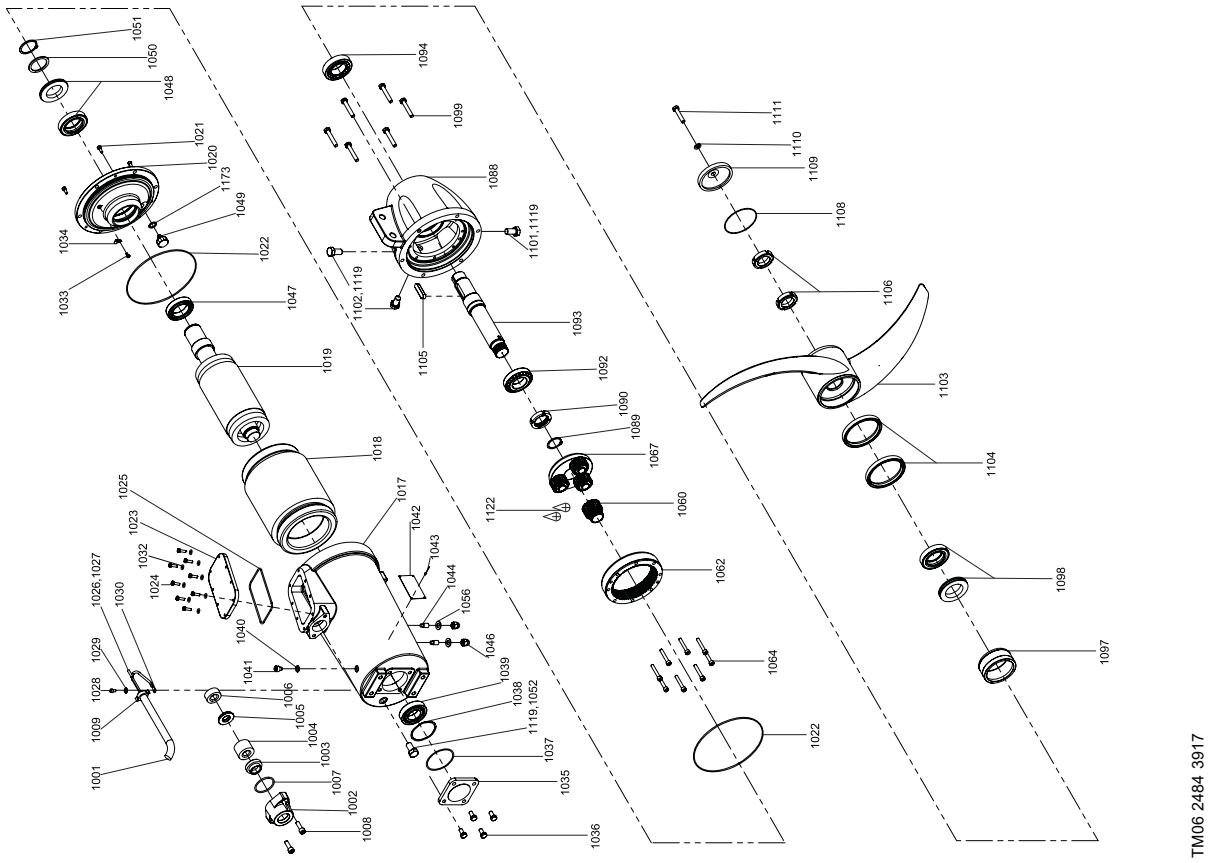

TM06 2484 3917

SMG.H.150-185

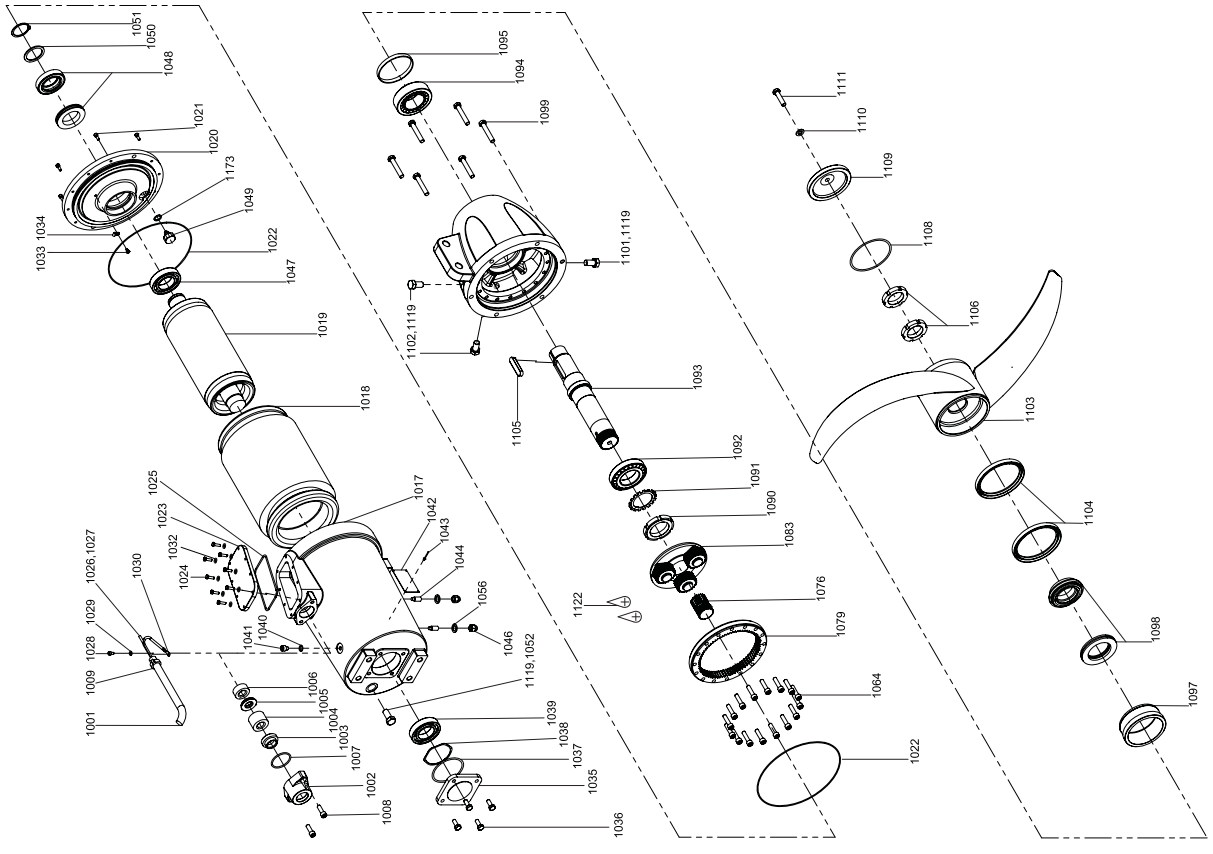

TM06 3063 3917

SFG

SFG.xx.130 (50/60 Hz) and SFG.xx.51 (60 Hz North America)

Bearing, motor

Pos.	Description/Kit No	95065458
1038	Compensation disc	1
1039	Ball bearing 6206 2RS1/C3	1
1047	Ball bearing 6207 2RS1/C3	1

Bearing, gearbox

Pos.	Description/Kit No	95065459
1090	Slotted nut	1
1091	Lock washer	1
1092	Tapered roller bearing 30207	1
1094	Tapered roller bearing 30207	1

Cable (11G1.5)

Pos.	Description/Kit No	95038410	95038411
1001	Cable	10 m / 32 ft	15 m / 49 ft
1026	Cable joint	6	6
1027	Cable joint	4	4
1030	Cable shoe	1	1

Cable entry 1.5 mm^2

Pos.	Description/Kit No		95065457
1003	Cable guide		1
1004	cable seal, large		1
1005	Thrust washer		1
1006	cable seal, small		1
1007	O-ring	39.45 x 1.78	1
1008	Cylinder head screw		2
1009	Cable relief		1
1025	O-ring	113.97 x 2.62	1
1026	Cable joint		10
1030	Cable shoe		1
-	Shrink tube for connections		10

Gasket kit

Pos.	Description/Kit No		95065480
1004	cable seal, large		1
1006	cable seal, small		1
1007	O-ring	39.45 x 1.78	1
1022	O-ring	158.42 x 2.62	3
1025	O-ring	113.97 x 2.62	1
1037	O-ring	56.82 x 2.62	1
1048	Mechanical shaft seal, rotor		1
	Mechanical shaft seal, stator		1
1050	Shim		1
1051	Circlip		1
1157	Gasket NBR	70 D86/66 x 2	-
	Gasket NBR	70 96 x 75 x 2	1

Gear housing

Note: Gear housing kit parts are pre-assembled.

Pos.	Description/Kit No	95038404
1088	Gear housing	1
1089	Circlip	1
1090	Slotted nut	1
1091	Lock washer	1
1092	Tapered roller bearing 30207	1
1093	Gear shaft	1
1094	Tapered roller bearing 30207	1
1095	Intermediate ring	1
1101	Drain plug with magnet	1
1102	Plug	2
1105	Parallel key	1
1119	PTFE tape	1

Propeller

Pos.	Description/Kit No	95039731
1103	Propeller	1
1104	Lip seal	2
1105	Parallel key	1
1106	Slotted nut	2
1108	Gasket	1
1109	Hub cover	1
1110	Washer	1
1111	Screw	1

Radial seal

Pos.	Description/Kit No		95039130
1073	O-ring	158.42 x 2.62	1
1104	Lip seal		2
1108	O-ring	85.0 x 2.5	1
	O-ring	105.0 x 3.0	1
	O-ring	184.0 x 3.0	1
1110	Washer		1
1157	Gasket NBR	70 D86/66 x 2	-
	Gasket NBR	70 D96 x 75 x 2	1

Shaft seal

Pos.	Description/Kit No	95065462
1095	Intermediate ring	1
1098	Mechanical shaft seal, rotor	1
	Mechanical shaft seal, stator	1

Water-in-oil sensor

Pos.	Description/Kit No	95038409
1049	Water-in-oil sensor	1
1173	Seal washer	1

Wear ring

Pos.	Description/Kit No		95037374
1022	O-ring	158.42 x 2.62	1
1097	Wear ring ceramic		1
1104	Lip seal		2
1108	O-ring	85.0 x 2.5	1
	O-ring	105.0 x 3.0	1
	O-ring	184.0 x 3.0	1
1110	Washer		1
1157	Gasket NBR	70 D86/66 x 2	1
	Gasket NBR	70 96 x 75 x 2	1

SFG.xx.130 (50/60 Hz) and SFG.xx.51 (60 Hz North America)

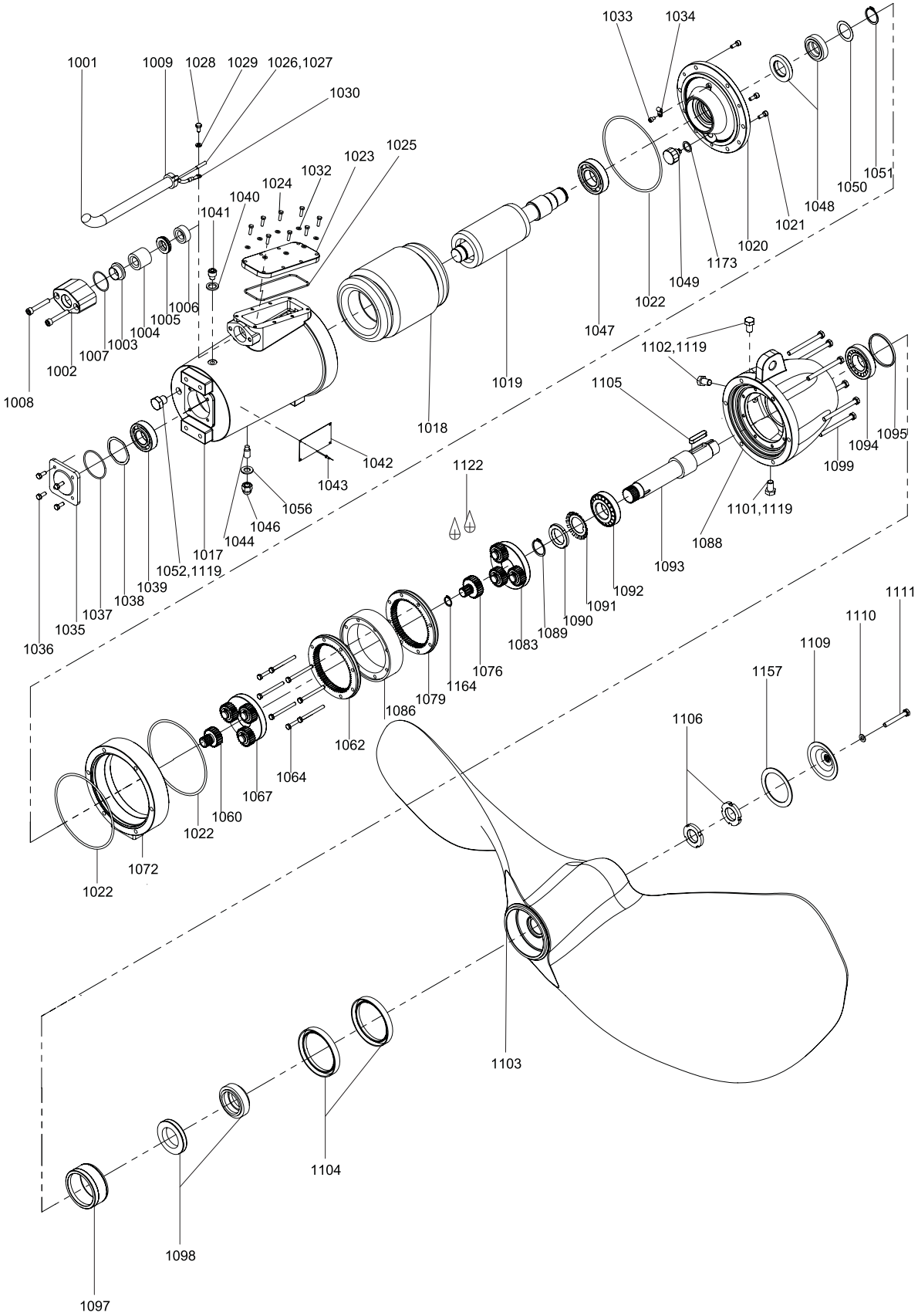

Gear

50 Hz	60 Hz SI	60 Hz US	STEP 1					STEP 2		
			i= 3.875	i = 4.286	i = 4.833	i = 5.600	i = 6.750	i = 3.556	i = 3.875	i = 4.286
SFG.07.130						95065509		95038555		
	SFG.07.130	SFG.10.51				95065509				95038554
SFG.10.130					95065510			95038555		
	SFG.10.130	SFG.14.51			95065510					95039554
SFG.14.130				95065494				95038555		
	SFG.14.130	SFG.19.51		95065494						95039554
SFG.17.130						95065509			95039709	
	SFG.17.130	SFG.23.51					95065523		95039709	
SFG.22.130						95065509		95038555		
	SFG.22.130	SFG.30.51					95065523	95038555		
SFG.27.130				95065494						95038554
	SFG.29.130	SFG.39.51				95065509			95039709	
SFG.33.130					95065510			95038555		
	SFG.33.130	SFG.44.51			95065510					95038554
SFG.36.130*			95065512							95038554
	SFG.36.130	SFG.48.51				95065509		95038555		

Pos.	Description/Kit No	95065512	95065494	95065510	95065509	95065523	95038555	95039709	95038554
1060	Sun wheel	1	1	1	1	1	-	-	-
1062	Ring gear	1	1	1	1	1	-	-	-
1067	Planet gear complete	1	1	1	1	1	-	-	-
1076	Sun wheel	-	-	-	-	-	1	1	1
1079	Ring gear	-	-	-	-	-	1	1	1
1083	Planet carrier	-	-	-	-	-	1	1	1
1164	Circlip	-	-	-	-	-	1	1	1

* Valid for products with production code 1601 and higher (production from 2016)

Motor

Note: Motor kit parts are pre-assembled.

Pos.	Description	50/60 Hz	SFG.07-14.130	SFG.17-36.130
		60 Hz US	SFG.10-19.51	SFG.23-48.51
		Kit No	95039700	95039701
1002	Cable flange		1	1
1007	O-ring		1	1
1008	Screw		2	2
1017	Motor housing		1	1
1018	Stator winded 6-pole 1.8 kW (2.4 hp)		1	-
	Stator winded 4-pole 3.6 kW (4.8 hp)		-	1
1019	Rotor with shaft 6-pole 1.8 kW (2.4 hp)		1	-
	Rotor with shaft 4-pole 3.6 kW (4.8 hp)		-	1
1020	Motor flange		1	1
1021	Screw		3	3
1022	O-ring		2	2
1023	Terminal box cover		1	1
1024	Screw		8	8
1025	O-ring		1	1
1028	Screw		1	1
1029	Lock washer		1	1
1033	Screw		1	1
1034	Cable clamp		1	1
1035	Bearing cover		1	1
1036	Screw		4	4
1037	O-ring		1	1
1038	Compensation disc		1	1
1039	Ball bearing 6206		1	1
1040	Washer		1	1
1041	Screw		1	1
1044	Set screw		1	1
1046	Nut		1	1
1047	Ball bearing 6207		1	1
1048	Mechanical shaft seal, rotor		1	1
	Mechanical shaft seal, stator		1	1
1049	Water-in-oil sensor		1	1
1050	Shim		1	1
1051	Circlip		1	1
1052	Plug		1	1
1056	Seal washer		1	1
1173	Seal washer		1	1

SFG.xx.130 (50/60 Hz) and SFG.xx.51 (60 Hz North America)

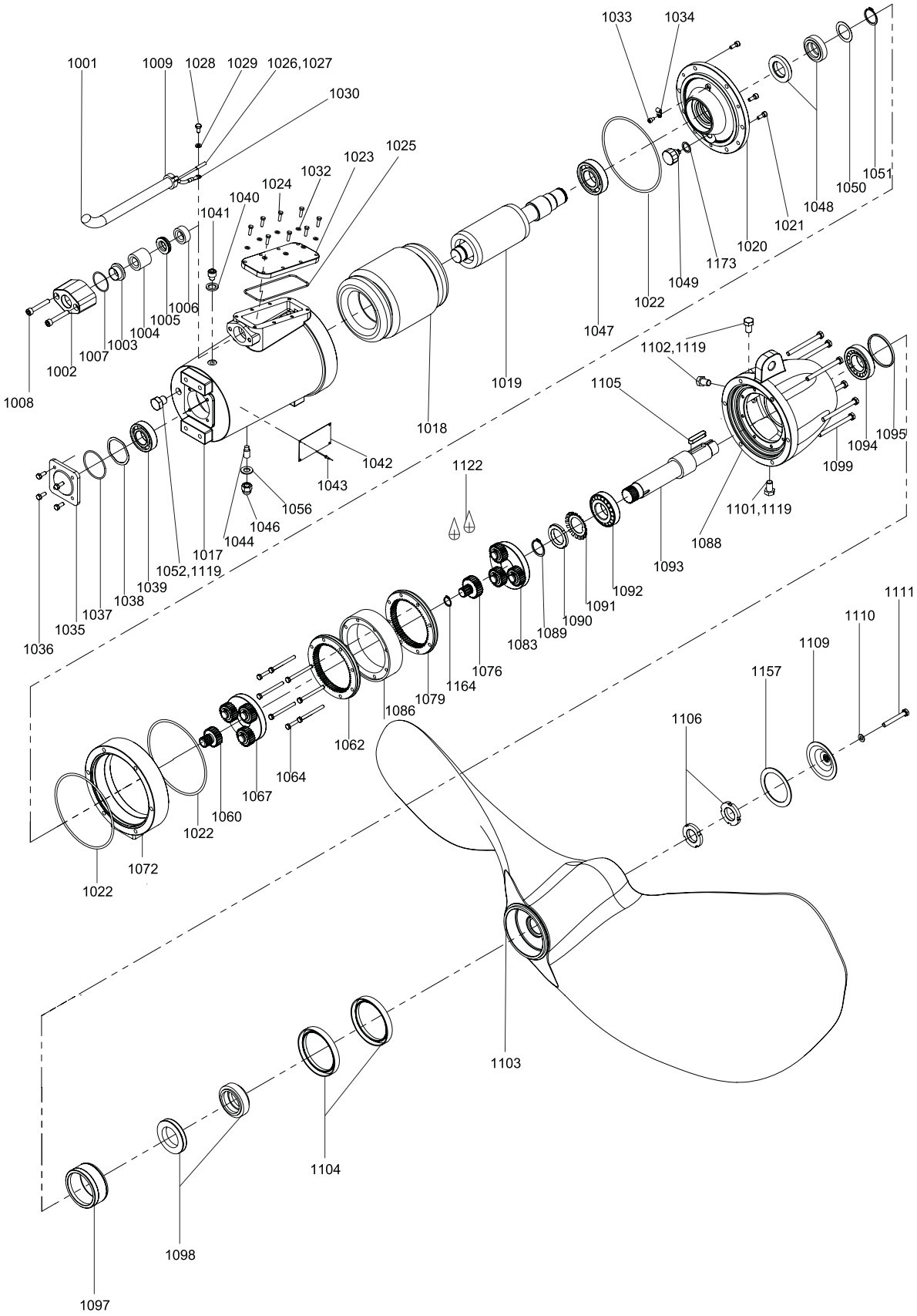

SFG.xx.180 (50/60 Hz) and SFG.xx.71 (60 Hz North America)

Bearing, motor

Pos.	Description/Kit No	95065458
1038	Compensation disc	1
1039	Ball bearing 6206 2RS1/C3	1
1047	Ball bearing 6207 2RS1/C3	1

Bearing, gearbox

Pos.	Description/Kit No	95065467
1090	Slotted nut; elastic stop	1
1092	Tapered roller bearing 30209	1
1094	Tapered roller bearing 32209	1

Cable (11G1.5)

Pos.	Description/Kit No	95038410	95038411
1001	Cable	10 m / 32 ft	15 m / 49 ft
1026	Cable joint	6	6
1027	Cable joint	4	4
1030	Cable shoe	1	1

Cable entry 1.5 mm^2

Pos.	Description/Kit No		95065457
1003	Cable guide		1
1004	cable seal, large		1
1005	Thrust washer		1
1006	cable seal, small		1
1007	O-ring	39.45 x 1.78	1
1008	Cylinder head screw		2
1009	Cable relief		1
1025	O-ring	113.97 x 2.62	1
1026	Cable joint		10
1030	Cable shoe		1
-	Shrink tube for connections		10

Gasket kit

Pos.	Description/Kit No		95065483
1004	cable seal, large		1
1006	cable seal, small		1
1007	O-ring	39.45 x 1.78	1
1022	O-ring	158.42 x 2.62	2
1025	O-ring	113.97 x 2.62	1
1037	O-ring	56.82 x 2.62	1
1048	Mechanical shaft seal, rotor		1
	Mechanical shaft seal, stator		1
1050	Shim washer		1
1051	Circlip		1
1073	O-ring	215.57 x 2.62	1
1157	Gasket NBR	70 96 x 75 x 2	1

Gear housing

Note: Gear housing kit parts are pre-assembled.

Pos.	Description/Kit No	95038481
1088	Gear housing	1
1089	Circlip	1
1090	Slotted nut	1
1092	Tapered roller bearing 30209	1
1093	Gear shaft	1
1094	Tapered roller bearing 32209	1
1101	Drain plug with magnet	1
1102	Plug	2
1105	Parallel key	1
1119	PTFE tape	3

Propeller

Pos.	Description	50/60 Hz	SFG.07-29.180	SFG.32-40.180
		60 Hz US	SFG.10-39.71	SFG.47-55.71
		Kit No	2 blades	3 blades
			95039732	95039733
1104	Lip seal		2	2
1105	Parallel key		1	1
1106	Slotted nut		2	2
1109	Hub cover		1	1
1110	Washer		1	1
1111	Screw		1	1
1112	Hub (2 blades)		1	-
	Hub (3 blades)		-	1
1115	Screw		4	6
1157	Gasket		1	1
1159	Washer		8	12
1160	Nut		4	6
1161	Screw		2	3
1162	Propeller blade type ∅1800		2	3

Radial seal

Pos.	Description/Kit No		95039131
1073	O-ring	215.57 x 2.62	1
1104	Lip seal		2
1108	O-ring	94.92 x 2.62	1
	O-ring	184.0 x 3.0	1
	O-ring	225.0 x 3.0	1
1110	Washer		1
1157	Gasket NBR	70 96 x 75 x 2	1

Shaft seal

Pos.	Description/Kit No	95065470
1098	Mechanical shaft seal, rotor	1
	Mechanical shaft seal, stator	1

Water-in-oil sensor

Pos.	Description/Kit No	95038409
1049	Water-in-oil sensor	1
1173	Seal washer	1

Wear ring

Pos.	Description/Kit No		95037375
1073	O-ring	215.57 x 2.62	1
1097	Wear ring ceramic		1
1104	Lip seal		2
1108	O-ring	94.92 x 2.62	1
	O-ring	184.0 x 3.0	1
	O-ring	225.0 x 3.0	1
1110	Washer		1
1157	Gasket NBR	70 96 x 75 x 2	1

SFG.xx.180 (50/60 Hz) and SFG.xx.71 (60 Hz North America)

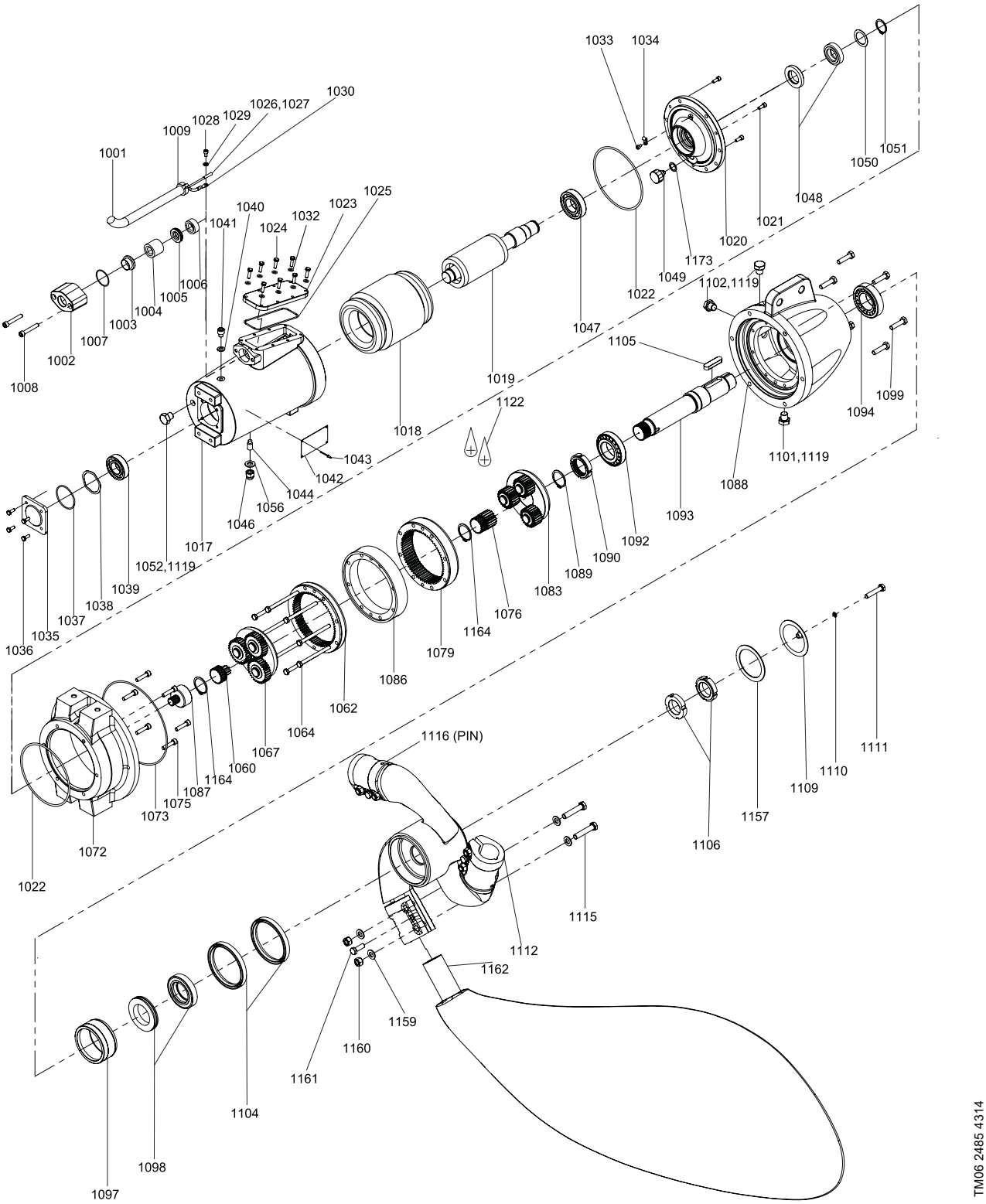

Gear

50 Hz	60 Hz SI	60 Hz US	STEP 1			STEP 2			
			i = 5.600	i = 6.750	i = 8.667	i = 3.556	i = 3.875	i = 4.286	i = 4.833
SFG.07.180					95038581	95038582			
	SFG.07.180	SFG.10.71			95038581			95038583	
SFG.10.180			95039711						95038584
	SFG.10.180	SFG.14.71		95039710					95038584
SFG.14.180				95039710		95038582			
	SFG.14.180	SFG.19.71		95039710				95038583	
SFG.17.180					95038581		95039712		
	SFG.17.180	SFG.23.71			95038581				95038584
SFG.22.180					95038581	95038582			
	SFG.22.180	SFG.30.71			95038581			95038583	
SFG.26.180				95039710				95038583	
	SFG.29.180	SFG.39.71			95038581		95039712		
SFG.32.180				95039710				95038583	
	SFG.35.180	SFG.47.71			95038581		95039712		
SFG.36.180			95039711						95038584
	SFG.38/40.180	SFG.55.71		95039710					95038584

Pos.	Description/Kit No	95039711	95039710	95038581	95038582	95039712	95038583	95038584
1060	Sun wheel	1	1	1	-	-	-	-
1062	Ring gear	1	1	1	-	-	-	-
1067	Planet gear complete	1	1	1	-	-	-	-
1076	Sun wheel	-	-	-	1	1	1	1
1079	Ring gear	-	-	-	1	1	1	1
1083	Planet carrier	-	-	-	1	1	1	1
1087	Gear coupling	1	1	1	-	-	-	-
1164	Circlip	1	1	1	1	1	1	1

Motor

Note: Motor kit parts are pre-assembled.

Pos.	Description	50/60 Hz	SFG.07-16.180	SFG.17-40.180
		60 Hz US	SFG.10-22.71	SFG.23-55.71
		Kit No	95039700	95039701
1002	Cable flange		1	1
1007	O-ring		1	1
1008	Screw		2	2
1017	Motor housing		1	1
1018	Stator winded 6-pole 1.8 kW (2.4 hp)		1	-
	Stator winded 4-pole 3.6 kW (4.8 hp)		-	1
1019	Rotor with shaft 6-pole 1.8 kW (2.4 hp)		1	-
	Rotor with shaft 4-pole 3.6 kW (4.8 hp)		-	1
1020	Motor flange		1	1
1021	Screw		3	3
1022	O-ring		2	2
1023	Terminal box cover		1	1
1024	Screw		8	8
1025	O-ring		1	1
1028	Screw		1	1
1029	Lock washer		1	1
1033	Screw		1	1
1034	Cable clamp		1	1
1035	Bearing cover		1	1
1036	Screw		4	4
1037	O-ring		1	1
1038	Compensation disc		1	1
1039	Ball bearing 6206		1	1
1040	U-washer		1	1
1041	Screw		1	1
1044	Set screw		1	1
1046	Nut		1	1
1047	Ball bearing 6207		1	1
1048	Mechanical shaft seal, rotor		1	1
	Mechanical shaft seal, stator		1	1
1049	Water-in-oil sensor		1	1
1050	Shim		1	1
1051	Retaining ring		1	1
1052	Plug		1	1
1056	Seal washer		1	1
1173	Seal washer		1	1

SFG.xx.180 (50/60 Hz) and SFG.xx.71 (60 Hz North America)

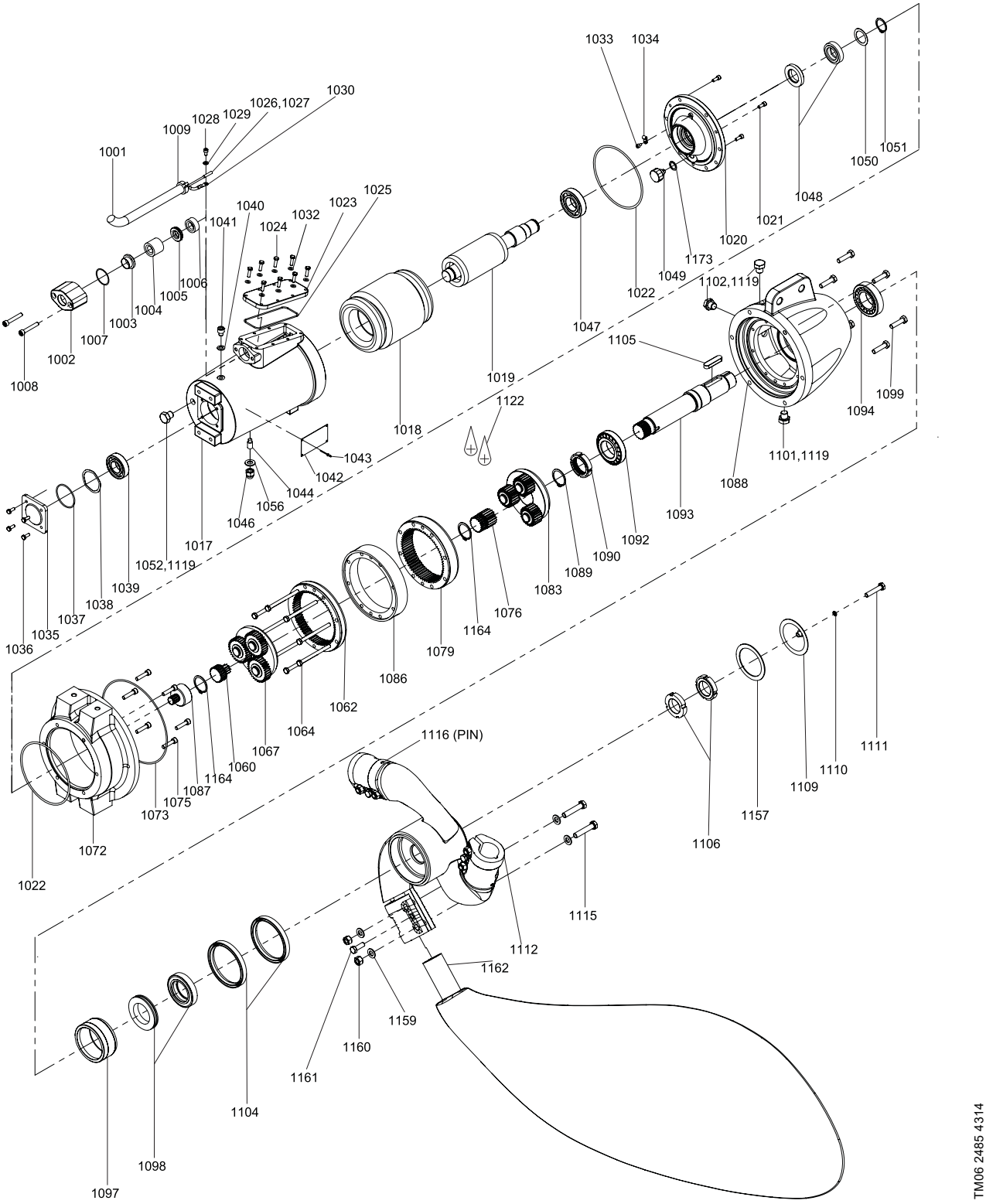

SFG.xx.230 (50/60 Hz) and SFG.xx.91 (60 Hz North America)

Bearing, motor

Pos.	Description/Kit No	95065458
1038	Compensation disc	1
1039	Ball bearing 6206 2RS1/C3	1
1047	Ball bearing 6207 2RS1/C3	1

Bearing, gearbox

Pos.	Description/Kit No	95065467
1090	Slotted nut; elastic stop	1
1092	Tapered roller bearing 30209	1
1094	Tapered roller bearing 32209	1

Cable (11G1.5)

Pos.	Description/Kit No	95038410	95038411
1001	Cable	10 m / 32 ft	15 m / 49 ft
1026	Cable joint	6	6
1027	Cable joint	4	4
1030	Cable shoe	1	1

Cable entry 1.5 mm^2

Pos.	Description/Kit No		95065457
1003	Cable guide		1
1004	cable seal, large		1
1005	Thrust washer		1
1006	cable seal, small		1
1007	O-ring	39.45 x 1.78	1
1008	Cylinder head screw		2
1009	Cable relief		1
1025	O-ring	113.97 x 2.62	1
1026	Cable joint		10
1030	Cable shoe		1
-	Shrink tube for connections		10

Gasket kit

Pos.	Description/Kit No		95065483
1004	cable seal large		1
1006	cable seal small		1
1007	O-ring	39.45 x 1.78	1
1022	O-ring	158.42 x 2.62	2
1025	O-ring	113.97 x 2.62	1
1037	O-ring	56.82 x 2.62	1
1048	Mechanical shaft seal, rotor		1
	Mechanical shaft seal, stator		1
1050	Shim washer		1
1051	Circlip		1
1073	O-ring	215.57 x 2.62	1
1157	Gasket NBR	70 96 x 75 x 2	1

Gear housing

Note: Gear housing kit part are pre-assembled.

Pos.	Description/Kit No	95038481
1088	Gear housing	1
1089	Circlip	1
1090	Slotted nut;	1
1092	Tapered roller bearing 30209	1
1093	Gear shaft	1
1094	Tapered roller bearing 32209	1
1101	Drain plug with magnet	1
1102	Plug	2
1105	Parallel key	1
1119	PTFE tape	3

Propeller

Pos.	Description	50/60 Hz	SFG.07-22.230	SFG.25-40.230
		60 Hz US	SFG.10-30.91	SFG.34-55.91
		Kit No	2 blades	3 blades
			95039734	95039735
1104	Lip seal		2	2
1105	Parallel key		1	1
1106	Slotted nut		2	2
1109	Hub cover		1	1
1110	Washer		1	1
1111	Screw		1	1
1112	Hub (2 blades)		1	-
	Hub (3 blades)		-	1
1115	Hexagon head screw		4	6
1157	Gasket		1	1
1159	Washer		8	12
1160	Nut		4	6
1161	Hexagon head screw		2	3
1162	Propeller blade type ∅2300		2	3

Radial seal

Pos.	Description/Kit No		95039131
1073	O-ring	215.57 x 2.62	1
1104	Lip seal		2
1108	O-ring	94.92 x 2.62	1
	O-ring	184.0 x 3.0	1
	O-ring	225.0 x 3.0	1
1110	Washer		1
1157	Gasket NBR	70 96 x 75 x 2	1

Shaft seal

Pos.	Description/Kit No	95065470
1098	Mechanical shaft seal, rotor	1
	Mechanical shaft seal, stator	1

Water-in-oil sensor

Pos.	Description/Kit No	95038409
1049	Water-in-oil sensor	1
1173	Seal washer	1

Wear ring

Pos.	Description/Kit No		95037375
1073	O-ring	215.57 x 2.62	1
1097	Wear ring ceramic		1
1104	Lip seal		2
1108	O-ring	94.92 x 2.62	1
	O-ring	184.0 x 3.0	1
	O-ring	225.0 x 3.0	1
1110	Washer		1
1157	Gasket NBR	70 96 x 75 x 2	1

SFG.xx.230 (50/60 Hz) and SFG.xx.91 (60 Hz North America)

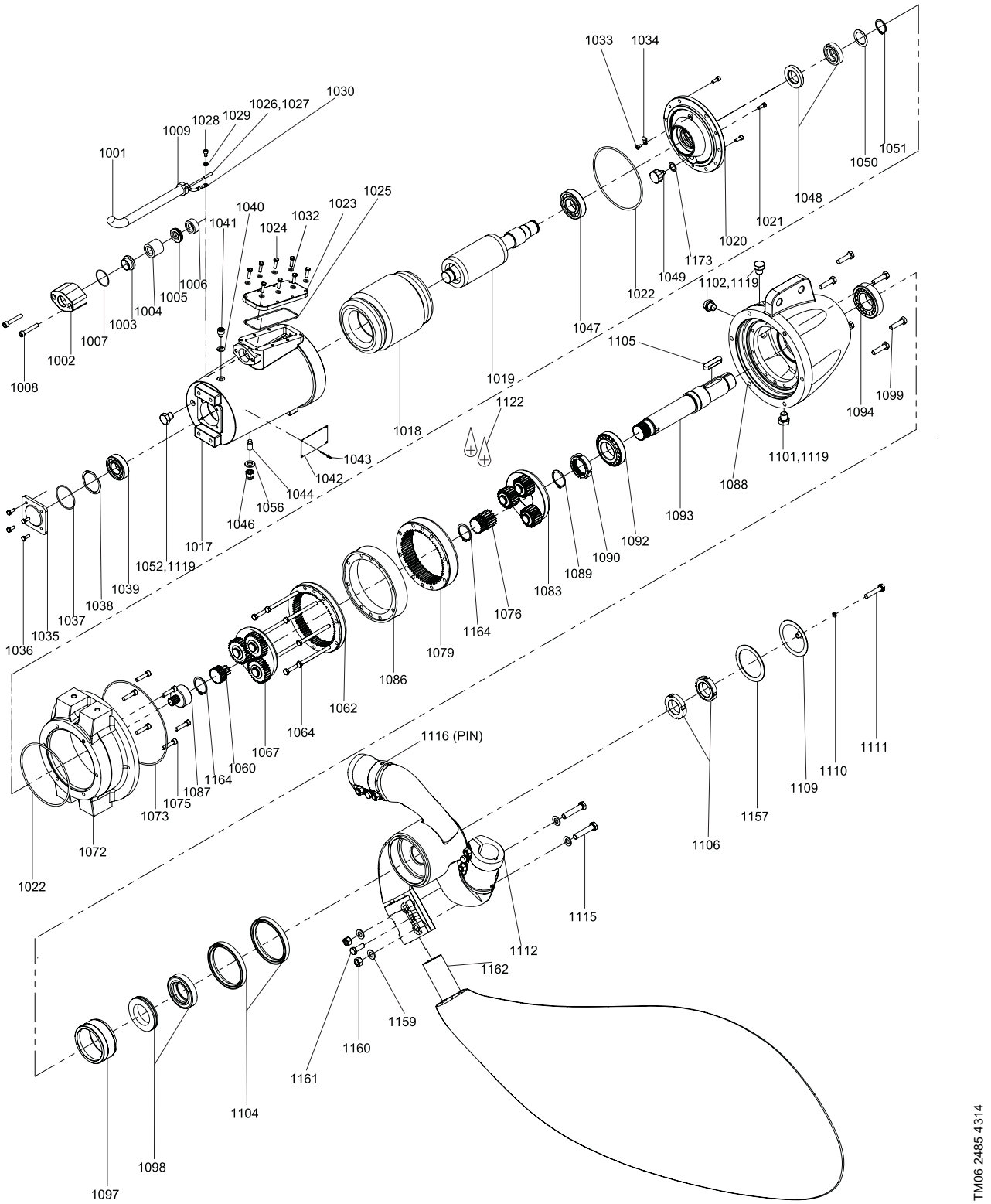

Gear

50 Hz	60 Hz SI	60 Hz US	STEP 1			STEP 2				
			i = 5.600	i = 6.750	i = 8.667	i = 3.875	i = 4.286	i = 4.833	i = 5.600	i = 6.750
SFG.07.230				95039710					95038585	
	SFG.07.230	SFG.10.91		95039710						95038749
SFG.10.230					95038581	95039712				
	SFG.09.230	SFG.12.91			95038581			95038584		
SFG.12.230			95039711						95038585	
	SFG.12.230	SFG.16.91		95039710					95038585	
SFG.15.230				95039710			95038583			
	SFG.16.230	SFG.22.91			95038581	95039712				
SFG.17.230					95038581			95038584		
	SFG.19.230	SFG.26.91			95038581				95038585	
SFG.22.230				95039710					95038585	
	SFG.22.230	SFG.30.91		95039710						95038749
SFG.26.230					95038581		95038583			
	SFG.25.230	SFG.34.91		95039710						95038749
SFG.33.230					95038581	95039712				
	SFG.32.230	SFG.43.91			95038581			95038584		
SFG.36.230				95039710				95038584		
	SFG.38/40.230	SFG.55.91		95039710					95038585	

Pos.	Description/Kit No	95039711	95039710	95038581	95038582	95038583	95038584	95038585	95038749
1060	Sun wheel	1	1	1	-	-	-	-	-
1062	Ring gear	1	1	1	-	-	-	-	-
1067	Planet gear complete	1	1	1	-	-	-	-	-
1076	Sun wheel	-	-	-	1	1	1	1	1
1079	Ring gear	-	-	-	1	1	1	1	1
1083	Planet carrier	-	-	-	1	1	1	1	1
1087	Gear coupling	1	1	1	-	-	-	-	-
1164	Circlip	1	1	1	1	1	1	1	1

Motor

Note: Motor kit parts are pre-assembled.

Pos.	Description	50/60 Hz	SFG.07-16.230	SFG.17-40.230
		60 Hz US	SFG.10-22.91	SFG.23-55.91
		Kit No	95039700	95039701
1002	Cable flange		1	1
1007	O-ring		1	1
1008	Screw		2	2
1017	Motor housing		1	1
1018	Stator winded 6-pole 1.8 kW (2.4 hp)		1	-
	Stator winded 4-pole 3.6 kW (4.8 hp)		-	1
1019	Rotor with shaft 4-pole 1.8 kW (2.4 hp)		1	-
	Rotor with shaft 6-pole 3.6 kW (4.8 hp)		-	1
1020	Motor flange		1	1
1021	Screw		3	3
1022	O-ring		2	2
1023	Terminal box cover		1	1
1024	Screw		8	8
1025	O-ring		1	1
1028	Screw		1	1
1029	Lock washer		1	1
1033	Screw		1	1
1034	Cable clamp		1	1
1035	Bearing cover		1	1
1036	Screw		4	4
1037	O-ring		1	1
1038	Compensation disc		1	1
1039	Ball bearing 6206		1	1
1040	U-washer		1	1
1041	Screw		1	1
1044	Set screw		1	1
1046	Nut		1	1
1047	Ball bearing 6207		1	1
1048	Mechanical shaft seal, rotor		1	1
	Mechanical shaft seal, stator		1	1
1049	Water-in-oil sensor		1	1
1050	Shim		1	1
1051	Circlip		1	1
1052	Plug		1	1
1056	Seal washer		1	1
1173	Seal washer		1	1

SFG.xx.230 (50/60 Hz) and SFG.xx.91 (60 Hz North America)

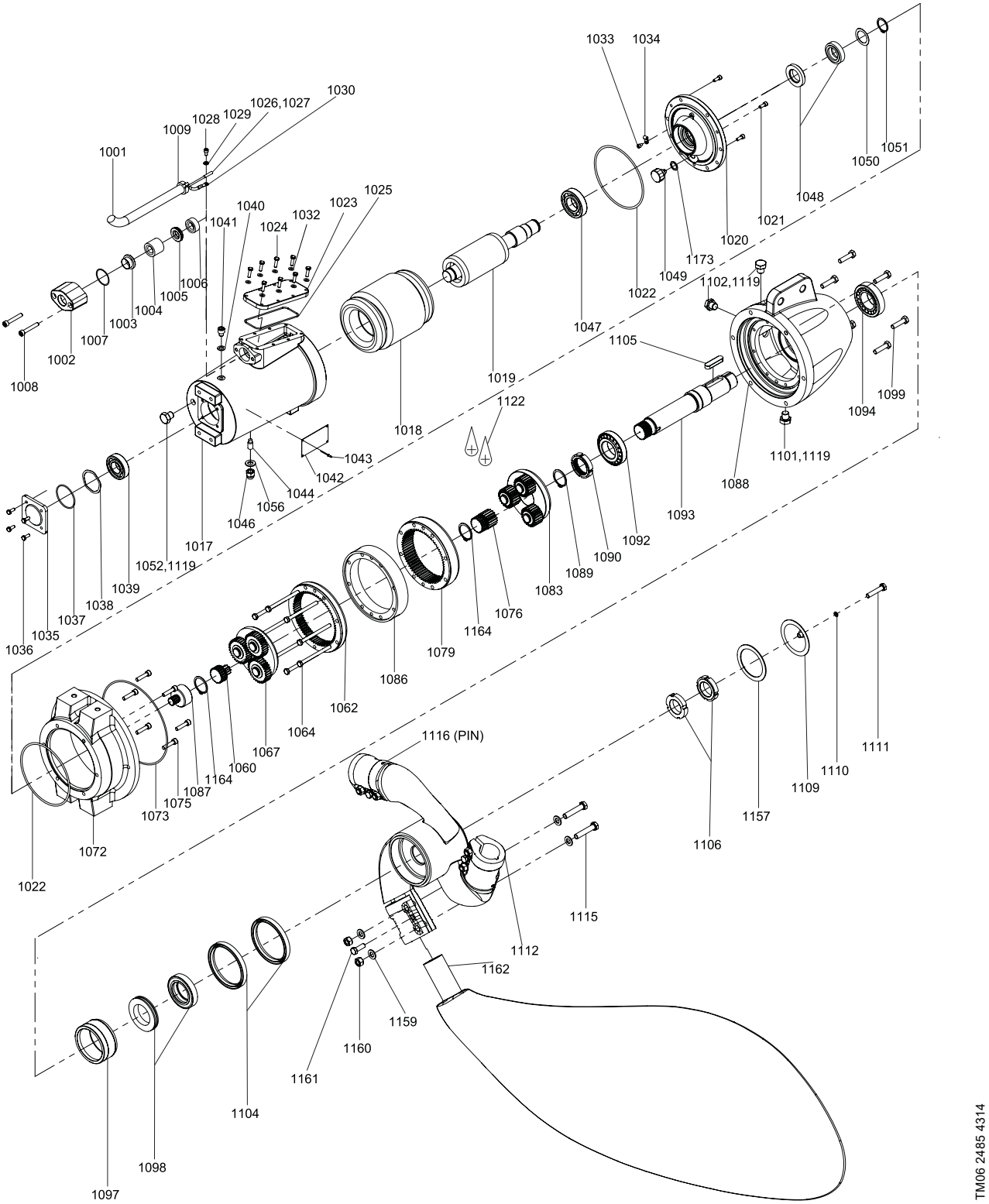

SFG.xx.260 (50/60 Hz) and SFG.xx.102 (60 Hz North America)

Bearing, motor

Pos.	Description/Kit No	96645955
1038	Compensation disc	1
1039	Ball bearing 6208 2RS1/C3	1
1047	Ball bearing 6010 2RS1/C3	1

Bearing, gearbox

Pos.	Description/Kit No	95065475
1090	Slotted nut	1
1091	Lock washer	1
1092	Tapered roller bearing 30212	1
1094	Tapered roller bearing 33212	1

Cable (11G2.5)

Pos.	Description/Kit No	95038486	95038487
1001	Cable	10 m / 32 ft	15 m / 49 ft
1026	Cable joint	6	6
1027	Cable joint	4	4
1030	Cable shoe	1	1

Cable entry, 2.5 mm^2

Pos.	Description/Kit No		95065465
1003	Cable guide		1
1004	cable seal, large		1
1005	Thrust washer		1
1006	cable seal, small		1
1007	O-ring	54.0 x 3.0	1
1008	Cylinder head screw		2
1009	Cable relief		1
1025	O-ring	139.29 x 3.53	1
1026	Cable joint		10
1030	Cable shoe		7
-	Shrink tube for connections		10

Gasket kit

Pos.	Description/Kit No		95035812
1004	cable seal, large		1
1006	cable seal, small		1
1007	O-ring	54.0 x 3.0	1
1022	O-ring	215.57 x 2.62	2
1025	O-ring	139.29 x 3.53	1
1037	O-ring	75.87 x 2.62	1
1048	Mechanical shaft seal, rotor		1
	Mechanical shaft seal, stator		1
1050	Shim		1
1051	Circlip		1
1073	O-ring	260.0 x 3.5	1
1108	O-ring	94.92 x 2.62	1

Gear housing

Note: Gear housing kit parts are pre-assembled.

Pos.	Description/Kit No	95038588
1088	Gear housing	1
1090	Slotted nut	1
1091	Lock washer	1
1092	Tapered roller bearing 30212	1
1093	Gear shaft	1
1094	Tapered roller bearing 33212	1
1095	Intermediate ring	1
1101	Drain plug with magnet	1
1102	Plug	2
1119	PTFE tape	3

Propeller

Pos.	Description	50/60 Hz	SFG.22-48.260	SFG.50-80.260
		60 Hz US	SFG.30-60.102	SFG.67-110.102
		Kit No	2 blades	3 blades
			95039736	95039737
1104	Lip seal		2	2
1106	Slotted nut		2	2
1108	Gasket NBR		1	1
1109	Hub cover		1	1
1110	Washer		1	1
1111	Screw		1	1
1112	Hub (2 blades)		1	-
	Hub (3 blades)		-	1
1113	Screw		2	3
1114	Washer		2	3
1131	Parallel key		2	3
1132	Blinds		2	3
1162	Propeller blade type ∅2600		2	3

Radial seal

Pos.	Description/Kit No		95039132
1073	O-ring	253.59 x 3.53	1
1104	Lip seal		2
1108	O-ring	120.2 x 3.53	1
	O-ring	225.0 x 3.0	1
	O-ring	94.92 x 2.62	1
1110	Washer		1

Shaft seal

Pos.	Description/Kit No	95065478
1095	Intermediate ring	1
1098	Mechanical shaft seal, rotor	1
	Mechanical shaft seal, stator	1

Water-in-oil sensor

Pos.	Description/Kit No	95038409
1049	Water-in-oil sensor	1
1173	Seal washer	1

Wear ring

Pos.	Description/Kit No		95037376
1073	O-ring	253.59 x 3.53	1
1097	Wear ring ceramic		1
1104	Lip seal		2
1108	O-ring	120.2 x 3.53	1
	O-ring	225.0 x 3.0	1
	O-ring	94.92 x 2.62	1
1110	Washer		1

SFG.xx.260 (50/60 Hz) and SFG.xx.102 (60 Hz North America)

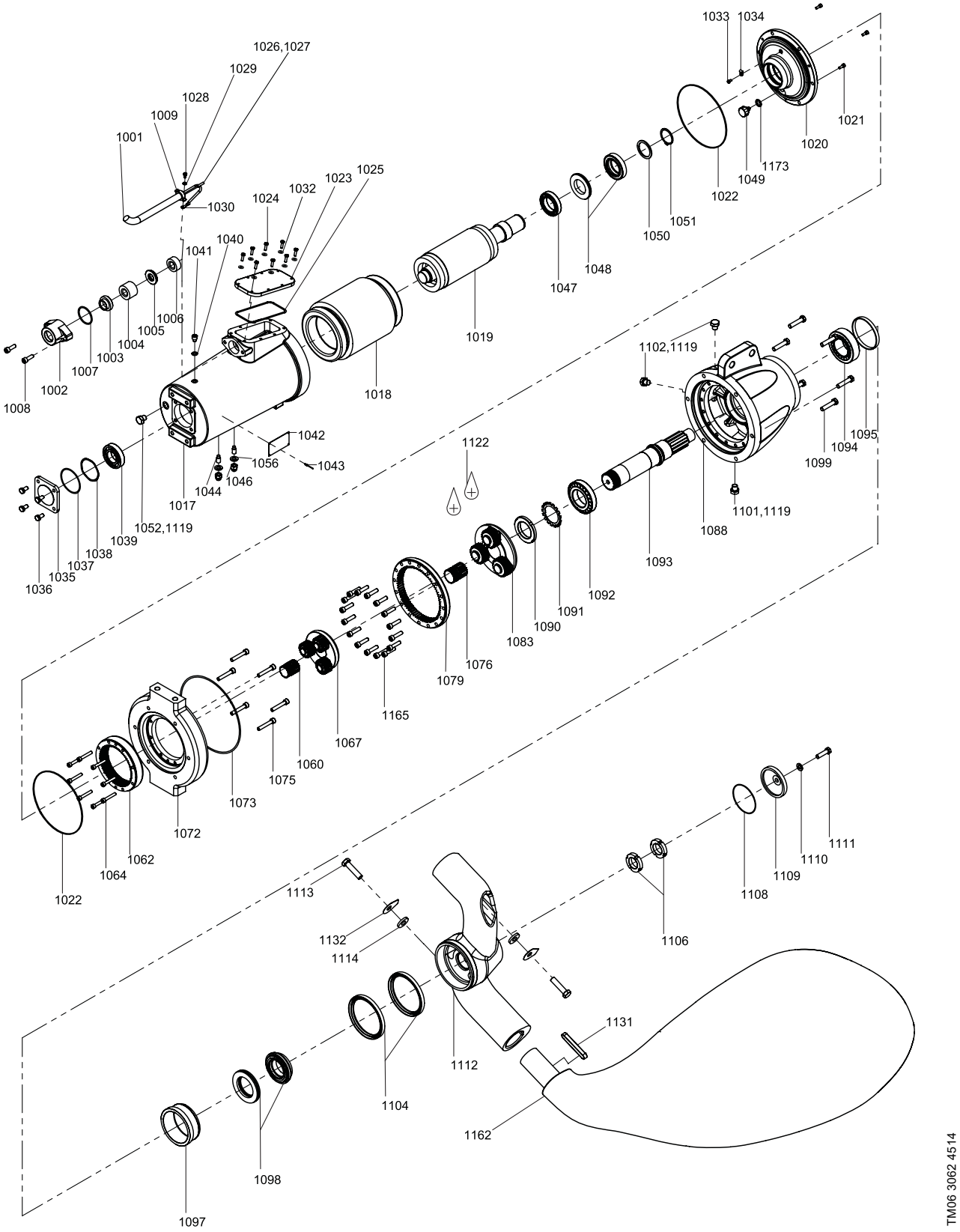

Gear

50 Hz	60 Hz SI	60 Hz US	STEP 1				STEP 2				
			i = 4.286	i = 4.833	i = 5.600	i = 6.750	i = 3.500	i = 4.125	i = 4.571	i = 5.167	i = 6.000
SFG.22.260					95065517						95038769
	SFG.22.260	SFG.30.102				95065524					95038769
SFG.27.260						95065524			95038611		
SFG.32.260				95065518							95038769
	SFG.32.260	SFG.43.102				95065524				95065525	
SFG.36.260						95065524		95065496			
	SFG.36.260	SFG.48.102			95065517						95038769
SFG.44.260	-	-	95065495								95038769
	SFG.44.260	SFG.60.102				95065524			95038611		
SFG.48.260				95065518						95065525	
SFG.50.260						95065524		95065496			
	SFG.50.260	SFG.67.102			95065517						95038769
SFG.60.260			95065495								95038769
	SFG.60.260	SFG.82.102				95065524			95038611		
SFG.66.260				95065518						95065525	
	SFG.72.260	SFG.98.102			95065517					95065525	
SFG.74.260						95065524	95065522				
SFG.80.260					95065517			95065496			
	SFG.80.260	SFG.110.102				95065524		95065496			

Pos.	Description/Kit No	95065495	95065518	95065517	95065524	95065522	95065496	95038611	95065525	95038769
1060	Sun wheel	1	1	1	1	-	-	-	-	-
1062	Ring gear	1	1	1	1	-	-	-	-	-
1067	Planet gear complete	1	1	1	1	-	-	-	-	-
1076	Sun wheel	-	-	-	-	1	1	1	1	1
1079	Ring gear	-	-	-	-	1	1	1	1	1
1083	Planet carrier	-	-	-	-	1	1	1	1	1

Motor

Note: Motor kit parts are pre-assembled.

Pos.	Description	50/60 Hz	SFG.22-48.260	SFG.50-80.260
		60 Hz US	SFG.30-60.102	SFG.67-110.102
		Kit No	95039707	95039708
1002	Cable flange		1	1
1007	O-ring		1	1
1008	Screw		2	2
1017	Motor housing		1	1
1018	Stator 6-pole 5.0 kW (6.7 hp)		1	-
	Stator 6-pole 8.0 kW (11 hp)		-	1
1019	Rotor with shaft 6-pole 5.0 kW (6.7 hp)		1	-
	Rotor with shaft 6-pole 8.0 kW (11 hp)		-	1
1020	Motor flange		1	1
1021	Screw		3	3
1022	O-ring		2	2
1023	Terminal box cover		1	1
1024	Screw		8	8
1025	O-ring		1	1
1028	Screw		1	1
1029	Lock washer		1	1
1033	Screw		1	1
1034	Cable clamp		1	1
1035	Bearing cover		1	1
1036	Screw		4	4
1037	O-ring		1	1
1038	Compensation disc		1	1
1039	Ball bearing 6208		1	1
1040	U-washer		1	1
1041	Screw		1	1
1044	Set screw		2	2
1046	Nut		2	2
1047	Ball bearing 6010		1	1
1048	Mechanical shaft seal, rotor		1	1
	Mechanical shaft seal, stator		1	1
1049	Water-in-oil sensor		1	1
1050	Shim		1	1
1051	Circlip		1	1
1052	Plug		1	1
1056	Seal washer		2	2
1173	Seal washer		1	1

SFG.xx.260 (50/60 Hz) and SFG.xx.102 (60 Hz North America)

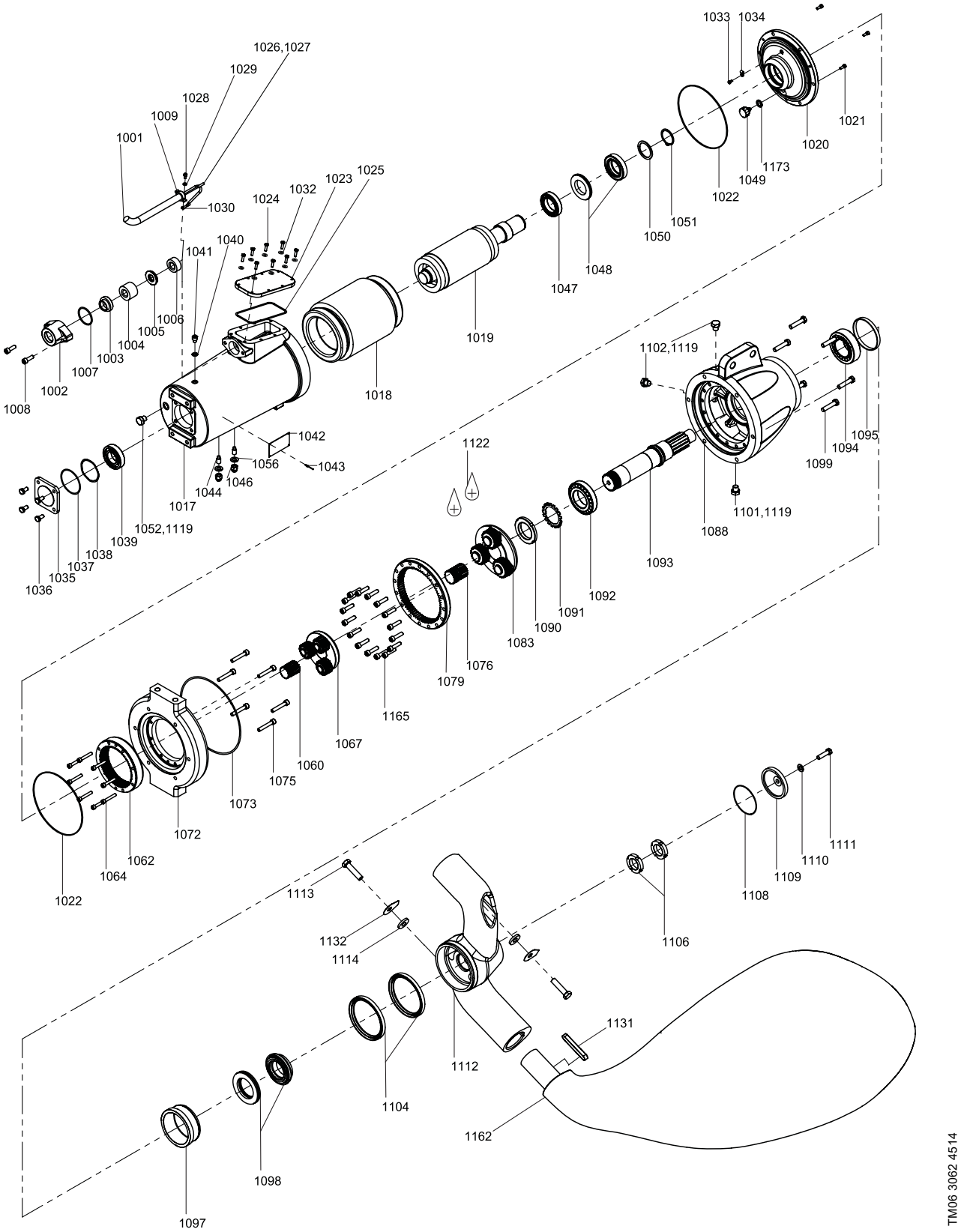

SFG.H (heady-duty)

Cable

Pos.	Description/Kit No		SFG.H.110.150	SFG.H.70.260 SFG.H.110.260
			95036338	95036314
1002	Cable, complete		1	1
1007	O-ring	54.0 x 3.0	1	1
1025	O-ring	139.29 x 3.53	1	1
1026	Cable press connector		4	4
1030	Cable end connector		6	6
-	Shrink tube	(D6.4-3.2)	-	-
-	Shrink tube	(D12.7-6.4)	-	-
-	Shrink tube	(D25.4-12.7)	-	-
-	Paint, modified epoxy, base (part A)		-	-
-	Paint, modified epoxy, curing agent (part B)		-	-

Gear

First planetary gear stage

Pos.	Description/Kit No	SFG.H.110.150.91	SFG.H.110.150.83	SFG.H.70.260.44	SFG.H.110.260.51
		i = 4.286	i = 4.286	i = 5.600	i = 5.600
		95065492	95065495	95065517	95065517
1060	Sun wheel	1	1	1	1
1062	Ring gear	1	1	1	1
1067	Planet carrier	1	1	1	1

Second planetary gear stage

Pos.	Description/Kit No	SFG.H.110.150.91	SFG.H.110.150.83	SFG.H.70.260.44	SFG.H.110.260.51
		i = 3.778	i = 4.125	i = 6.000	i = 5.167
		95065521	95065496	95038769	95065525
1060	Sun wheel	1	1	1	1
1062	Ring gear	1	1	1	1
1067	Planet carrier	1	1	1	1

Gear housing

Pos.	Description/Kit No	SFG.H.110.150	SFG.H.70.260 SFG.H.110.260
		95038516	95038588
1088	Gear housing	1	1
1090	Slotted nut	1	1
1091	Washer	1	1
1092	Ball bearing 30212	1	1
1093	Shaft drive	1	1
1094	Ball bearing 33212	1	1
1095	Distance ring	1	1
1101	Plug	1	1
1102	Plug	2	2
1105	Key	1	1
-	Strip teflon	3	3

Propeller

For 2-blade versions only.

Pos.	Description/Kit No	SFG.H.70	SFG.H.
		95039736	95038509
1104	Lip seal	2	2
1106	Slotted nut	2	2
1108	Gasket NBR 65 D106/90 x 10	1	1
1109	Hub cover	1	1
1110	Washer	1	1
1111	Screw	1	1
1112	Hub	1	1
1113	Screw	2	2
1114	Washer	2	2
1131	Fit-in key	2	2
1132	Cover	2	2
1162	Propeller blade	2	2

SFG.H.xx.150

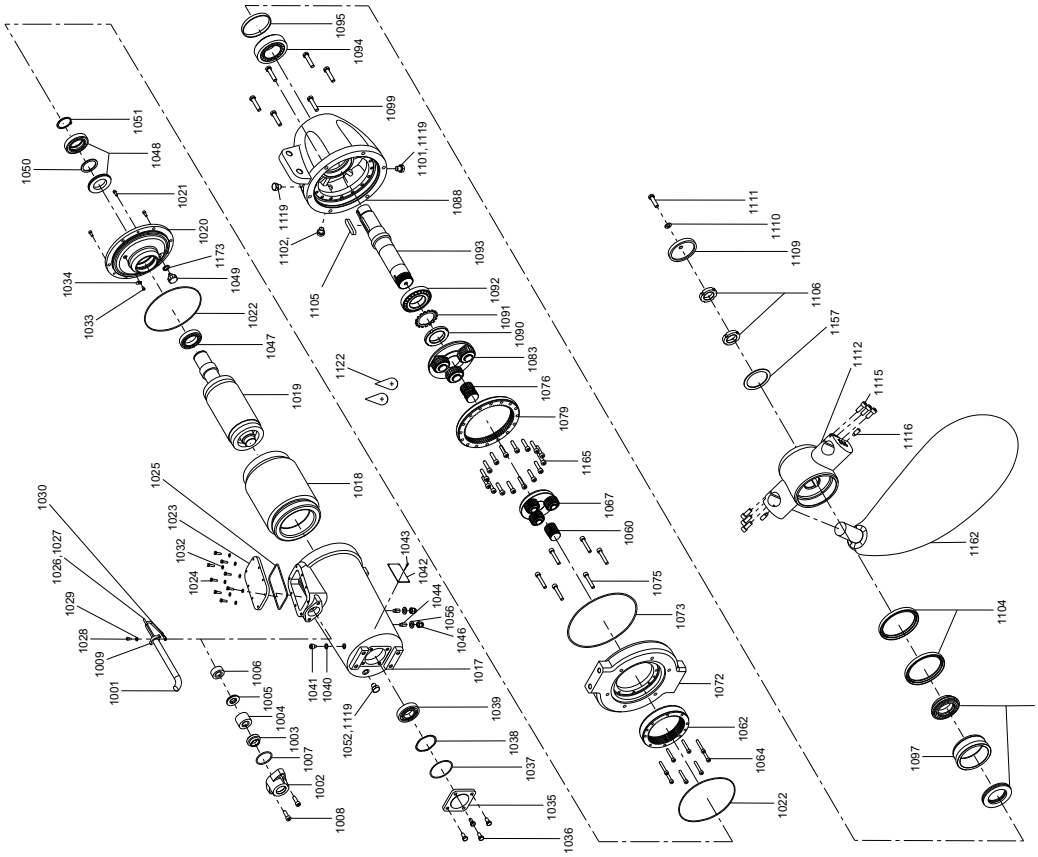

TM07 7002 3917

SFG.H.xx.260

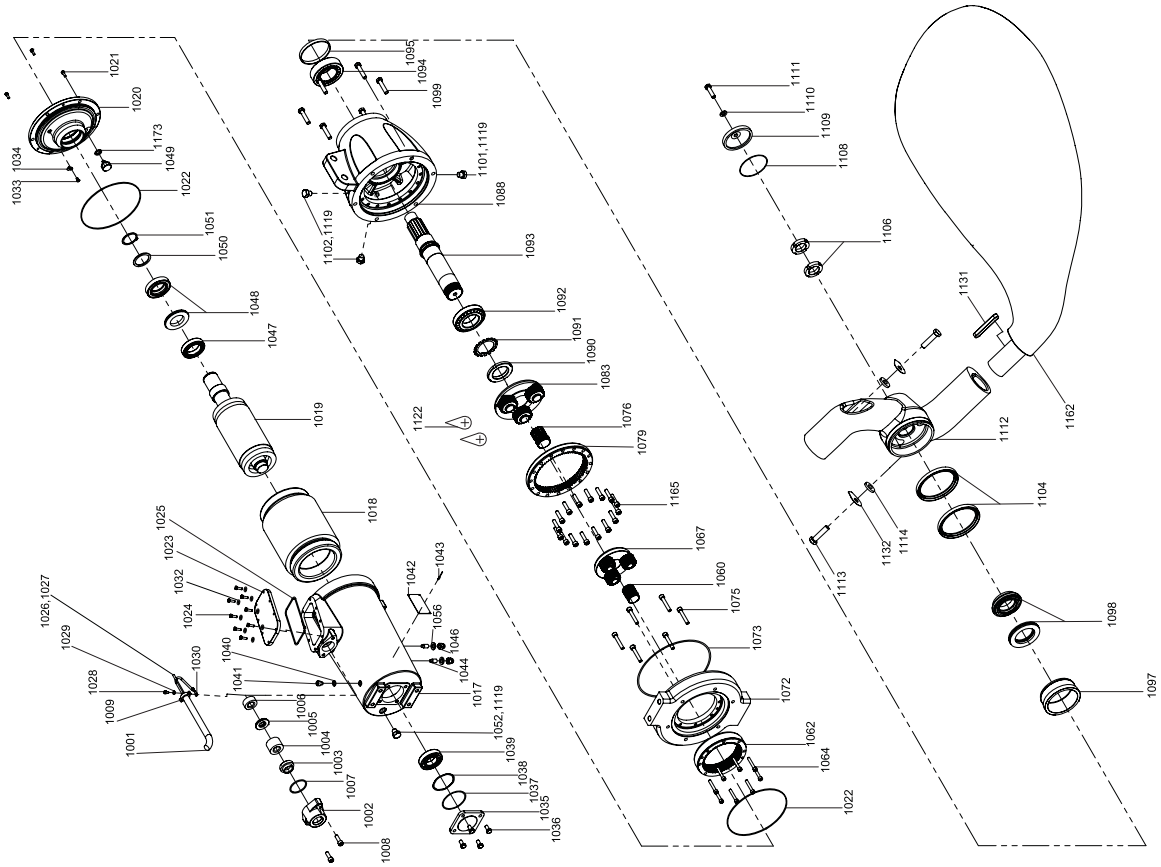

TM06 3062 3917

Bearing, motor

Pos.	Description/Kit No		96645955
1038	Compensation disc		1
1039	Ball bearing 6208 2RS		1
1047	Ball bearing 6010 2RS		1

Bearing, gearbox

Pos.	Description/Kit No		95065475
1090	Slotted nut		1
1091	Washer		1
1092	Tapered roller bearing 30212		1
1094	Tapered roller bearing 33212		1

Gasket

Pos.	Description/Kit No		95035812
1004	cable seal, large		1
1006	cable seal, small		1
1007	O-ring	54.0 x 3.0	1
1008	O-ring	97.92 x 2.62	1
1022	O-ring	215.57 x 2.62	1
1025	O-ring	139.29 x 3.53	1
1037	O-ring	75.87 x 2.62	1
		260.0 x 3.5	1
1048	Shaft seal - rotor		1
	Shaft seal - stator		1
1050	Washer		1
1051	Circlip		1
1157	Gasket NBR	65 D106/90 x 10	1

Gear housing and hub cover

Pos.	Description/Kit No	95039320
1088	Gear housing	1
1109	Hub cover	1

Radial seal

Pos.	Description/Kit No		95039132
1022	O-ring	253.59 x 3.53	1
1104	Lip seal		2
1108	O-ring	94.92 x 2.62	1
	O-ring	120.24 3.53	1
	O-ring	225.0 x 3.0	1
1110	Washer		1
1157	Gasket NBR	65 D106/90 x 10	1
	Gasket NBR	65 D135/133 x 12	1

Shaft seal

Pos.	Description/Kit No	95065478
1095	Distance ring	1
1098	Shaft seal - rotor	1
	Shaft seal - stator	1

Wear ring

Pos.	Description/Kit No		95037376
1097	Wear ring ceramic		1
1104	Lip seal		2
1108	O-ring	94.92 x 2.62	1
	O-ring	120.24 x 3.53	1
	O-ring	225.0 x 3.0	1
1022	O-ring	253.59 x 3.53	1
1110	Washer		1
1157	Gasket NBR	65 D106/90 x 10	1
	Gasket NBR	65 D135/113 x 12	1

WIO sensor

Pos.	Description/Kit No	95038409
1049	WIO sensor	1
1173	Seal washer	1
-	Contactor	2

SFG.H.xx.150

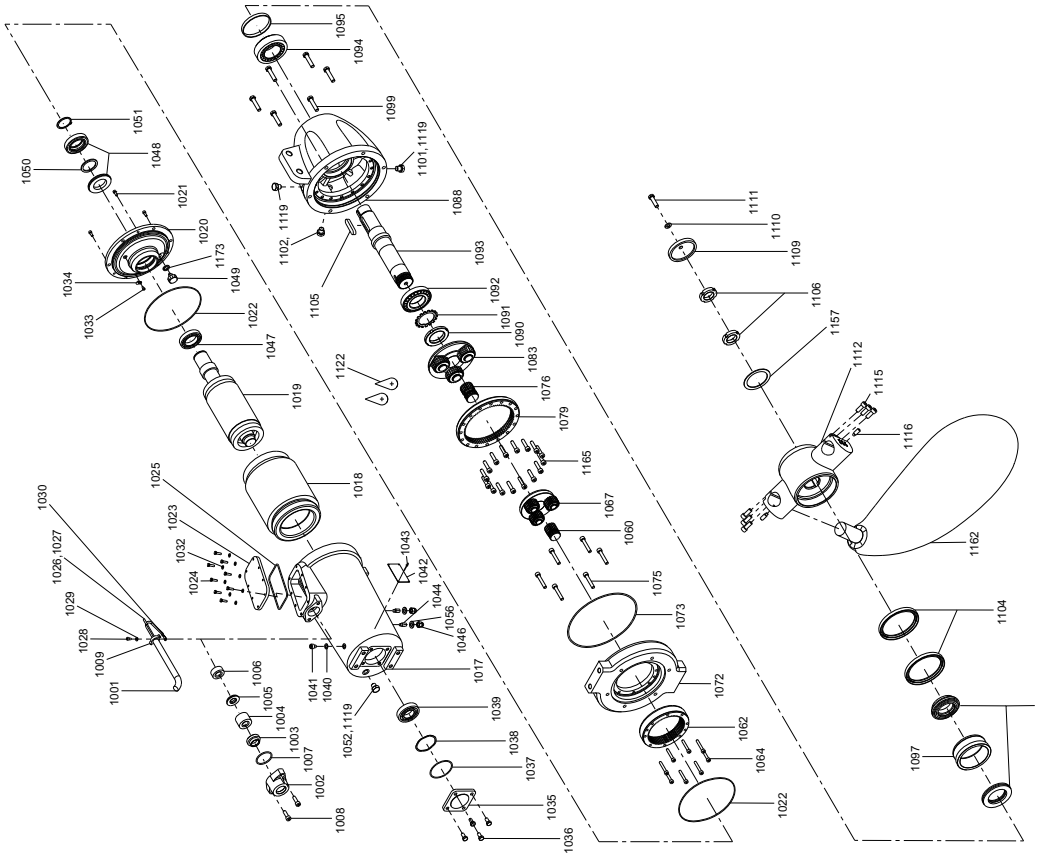

TM07 7002 3917

SFG.H.xx.260

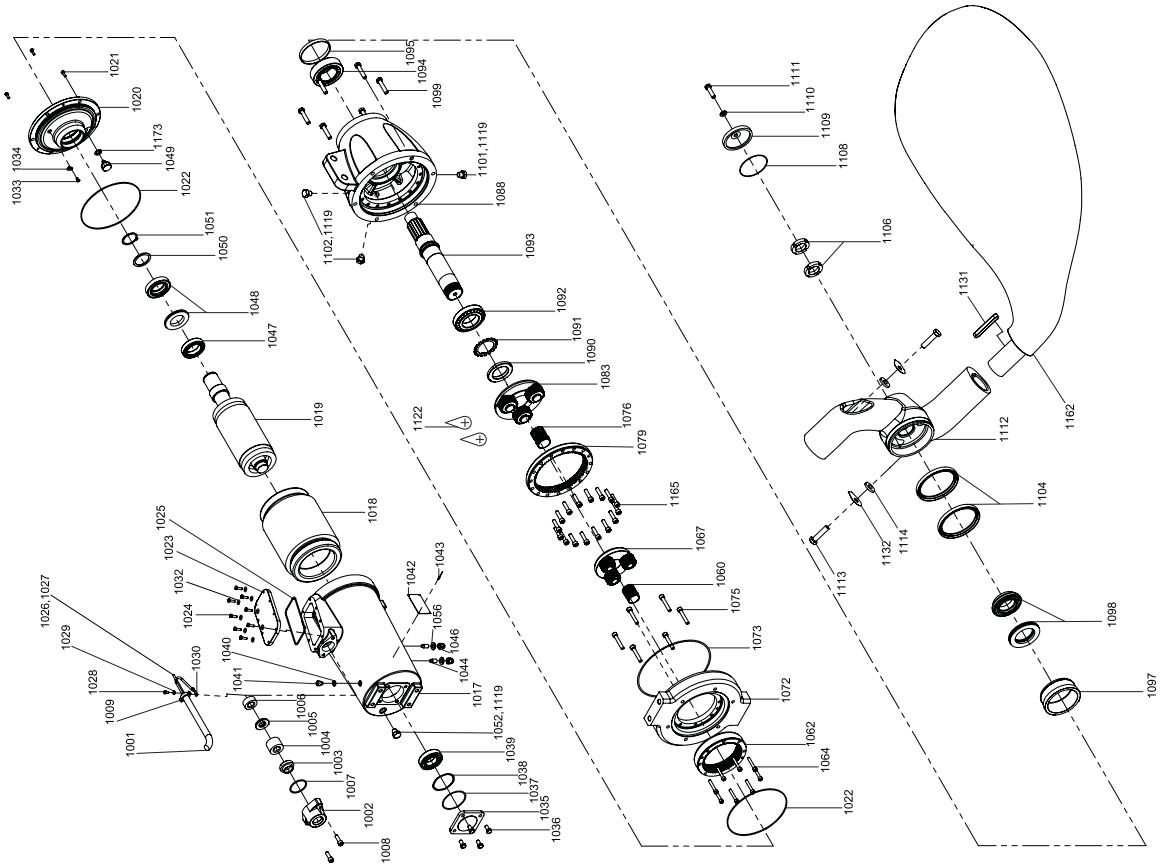

TM06 3062 3917